LEGAL NOTICE/ PUBLIC NOTICE

The City of Berwyn will receive sealed bids for Berwyn Police Station – HVAC Controls Replacement. The Berwyn Police Station (Public Safety Center) is located at 6401 W. 31st Street, Berwyn, IL 60402.

Bids are due by 12:00pm local time on Friday, December 9, 2016 to the City Clerk at the City of Berwyn, 6700 W. 26th Street, Berwyn, IL 60402. Bids shall be opened at 2:00PM on Friday, December 9th. A Contract for the Berwyn Police Station – HVAC Controls Replacement will be awarded. Notice to Proceed to the Contractor will be issued shortly after award.

Bid documents are available on or after Monday, November 14, 2016 at the City Clerk's Desk at City Hall: 6700 West 26th Street, Berwyn, IL 60402. Contact: Christopher Ried, of Patrick Engineering [the Project Engineer] (630-795-7286 or at cried@patrickco.com) with any questions related to this project.

The City of Berwyn reserves the right to reject or waive any or all bids.

BERWYN POLICE STATION

HVAC CONTROL SYSTEM REPLACEMENT

REQUEST FOR PROPOSALS

REVISION 0

ISSUED FOR BID 11/14/2016

Owner

The City of Berwyn
6700 W. 26th Street
Berwyn, IL 60402

Contents

1.TIME AND PLACE OF FURNISHING OF PROPOSALS 3
2.DESCRIPTION OF WORK 3
3.INSTRUCTIONS TO BIDDERS 3
4.AWARD CRITERIA AND REJECTION OF BIDS 3
5.COMPETENCY OF PROPOSER: 3
6.INSURANCE PROVISIONS 4
7.ADDITIONS TO AND/OR DELETIONS FROM THE CONTRACT 7
8.PAYMENT OF EMPLOYEES; PREVAILING WAGE RATES 8
9.PROJECT BACKGROUND 8
10. PROJECT SCOPE OF WORK 8
11. SUBMITTAL REQUIREMENTS 9

1. TIME AND PLACE OF FURNISHING OF PROPOSALS

Proposals for the project described herein will be received at the office of the City Engineer, the CITY OF BERWYN 6700 WEST 26th STREET BERWYN, ILLINOIS 60402, until 12:00pm on Friday, December 9th, and will be publicly opened and read at that time.

2. DESCRIPTION OF WORK

City of Berwyn (Berwyn) is seeking a firm fixed fee proposal from qualified contractors to provide Design/Build services for the replacement of the heating, ventilation and air conditioning (HVAC) control system at the Berwyn Police Station located at 6401 W. 31st Street, Berwyn, IL 60402 (Site).

This Request for Proposal (RFP) is being solicited based on the following specifications and existing drawings, attached to and part of this RFP:

- Base Bid
  - 23 09 13 Instrumentation and Control Devices for HVAC – 07/07/2016
  - 23 09 23 Direct-Digital Control System for HVAC – 10/31/2016
  - 23 09 93 Sequence of Operations for HVAC Controls - 07/07/2016
  - Existing Control Drawings dated 06/09/2000
- Alternate #2
  - Actuator Replacement Scope of Work – 10/03/2016

3. INSTRUCTIONS TO BIDDERS

A. Request for Proposal documents may be obtained from the **City Clerk, City of Berwyn, 6700 West 26th Street, Berwyn, Illinois, 60402.**

B. **Proposal forms are non-transferrable.** Only those Proposals that have been obtained from, and with the approval of, the City of Berwyn will be accepted at the bid opening.

C. The Contractor will be required to pay Prevailing Wages in accordance with all applicable laws.

4. AWARD CRITERIA AND REJECTION OF BIDS

This Contract will be awarded to the lowest responsive and responsible bidder considering conformity with the terms and conditions established by the City in the Proposal. The issuance of Plans and Proposal forms, etc. for bidding shall not be the sole determinant of responsibility. The City reserves the right to determine responsibility at the time of award, to reject any and all Proposals, to re-advertise the proposed improvements and to waive technicalities.

5. COMPETENCY OF PROPOSER:

No proposal may be accepted from or contract awarded to any person, firm or corporation who is in arrears or in default to the City of Berwyn upon any debt or contract. Prior failure of a proposer to perform faithfully on any previous contract or work for the City of Berwyn may be grounds for rejection. The Proposer must have not been suspended or debarred from doing business with the state and/or federal government. The Proposer, if requested, shall present evidence of performance ability and possession of necessary facilities, pecuniary resources and

adequate insurance to comply with the terms of these proposal documents. Such evidence shall be presented within a specified time and to the satisfaction of the City of Berwyn.

6. INSURANCE PROVISIONS

Description: This item shall consist of the Contractor's efforts to protect the Owner, the Engineer, and any other parties listed herein, from any adverse actions that may result because of the construction activities by the Contractor or any of his Subcontractors. This shall include the Hold Harmless Provisions, as outlined below, and the necessary Insurance Provisions complete as described herein. All of the following provisions are included:

Hold Harmless Provisions

To the fullest extent permitted by law, the Contractor hereby agrees to defend, indemnify, and hold harmless the Owner, its officials, agents, employees, and volunteers, its Engineers, Engineering Solutions and its agents and employees, and the Engineer's Consultants and their respective agents and employees, herein referred to as Indemnitees, from and against any and all claims for injuries, deaths, damages, losses, patent claims, suits, liabilities, judgments, economic losses and expenses, including but not limited to, attorney's fees arising out of or resulting from the performance of work under this Contract, provided that such claim, loss, or expense is attributable to bodily injury, sickness, disease or death, or to injury to or destruction of, tangible property (other than the work itself) including loss of use resulting therefrom, but only to the extent caused in whole or in part by negligent acts or omissions of the Contractor, a Subcontractor, anyone directly or indirectly employed by them, or anyone for whose acts they may be liable, excluding any apportionate amount of any claim, damage, loss, or expense which is caused by a party indemnified hereunder. Such obligations shall not be construed as to negate, abridge, or reduce other rights or obligations of indemnity which would otherwise exist as to a party or persons described in this paragraph. The Contractor shall, at his own expense, appear, defend, and pay all charges of attorneys and all costs and other expenses arising therefrom, or in connection therewith, and if any judgment shall be rendered against the Owner, its officials, agents, employees, or its Engineers, Engineering Solutions, and its agents and employees, or their Subcontractors in any action, the Contractor shall at his own expense satisfy and discharge the same.

In any claims against any person or entity indemnified under this paragraph by an employee of the Contractor, a Subcontractor, anyone directly or indirectly employed by them, or anyone for whose acts they may be liable, the indemnification obligation under this paragraph shall not be limited by a limitation on the amount or type of damages, compensation, or benefits payable by or for the Contractor or a Subcontractor under worker's or workmen's compensation acts, disability benefits acts, or other employee benefit acts. Engineering Solutions are intended to be a third-party beneficiary under this Contract.

The Contractor expressly understands and agrees that any performance bond or insurance policies required by this Contract, or otherwise provided by the Contractor, shall in no way limit the responsibility to indemnify, keep and save harmless and defend the Owner, its officials, agents, employees and its Engineers, Engineering Solutions and its agents and employees as herein provided.

The Contractor further agrees, that to the extent that money is due the Contractor by virtue of this Contract, and as shall be considered necessary in the judgment of the Owner, funds may be retained by the Owner to protect itself and/or the Engineer against said loss until such claims, suits, or judgments shall have been settled or discharged and/or evidence to that effect shall have been furnished to the satisfaction of the Owner and the Engineer.

The Contractor and any Subcontractor engaged in the performance of any work on this project agree to assume the entire liability for all personal injury claims suffered by its own employees, including without limitation, claims asserted by persons allegedly injured on the project; waives any limitation of liability defense based upon the Worker's Compensation Act, court interpretations of said Act or otherwise; and agree to indemnify and defend the Owner and the Engineer and their agents, employees, and consultants (the "Indemnitees") from and against all such loss, expense, damage or injury, including reasonable attorneys' fees, that the Indemnitees may sustain as a result of such claims, except to the extent that Illinois law prohibits indemnity for the Indemnitees' own negligence.

Pursuant to the Hold Harmless Provisions as outlined above, the Contractor shall secure and maintain in effect at all times, at his expense, insurance of the following kinds and limits to cover all locations of the Contractor's operations, including all his Subcontractors, in connection with work on this project. The Contractor shall furnish Certificates of Insurance to the Owner (naming the Owner as an additional insured) **before starting construction**, or within ten (10) days after the execution of the Contract by the Owner, whichever date is reached first. **If the Contractor fails to meet this time requirement for submitting the insurance to the Owner, working days shall be assessed in accordance with Article 108.04 of the Standard Specifications, or the contractor may be disqualified.** All insurance shall include a non-cancellation clause provision preventing cancellation without thirty (30) days written prior notice to the Owner, and shall remain in effect throughout the life of the project.

Please take note that all of the insurance noted below is required. For example, the OWNER and Engineering Solutions must be named as additional insureds on a "primary, non-contributory basis" for Part 1 noted below, and all insurance noted under Parts 2, 3 and 4 below must be provided, unless specifically deleted for this project.

A. **Minimum Limits of Insurance**

Contractor and his Subcontractors shall maintain limits of no less than:

1. Contractors-

   Commercial General Liability: $5,000,000 combined single limit per occurrence for bodily injury, personal injury and property damage. The general aggregate shall be twice the required occurrence limit. The General Liability Policy shall include coverage for Contractual Liability and Broad Form Property Damage Coverage. OWNER and Engineering Solutions shall be named as Additional Insureds on a Primary Non-Contributory basis. All coverage afforded the "Additional Insureds" shall be for all ongoing and completed operations performed by the Contractor, their subcontractor(s) and/or supplier(s), and anyone directly or indirectly employed by them for all work associated with this project. The Policy will include a Per Project Aggregate Endorsement. Also, any "XCU Exclusions" shall be deleted.

   The coverage to be afforded under this section is applicable to the work associated with the project, as outlined in this document, for claims arising from the negligent acts and/or omissions of the Contractor, their subcontractor(s) and/or supplier(s), and anyone directly or indirectly employed by them.

2. Automobile Liability: $1,000,000 combined single limit per accident for bodily injury and property damage for any vehicle owned, leased, hired, or non-owned, used by the Contractor.

3. Workers' Compensation and Employers' Liability: Workers' Compensation limits and coverage for the specific type of work being performed as required by the Labor Code of the State of Illinois and Employers' Liability limits of $1,000,000 per accident. The Policy will also include a Waiver of Subrogation in favor of the OWNER and Engineering Solutions.
The coverage to be afforded under this section is applicable to the work associated with the project, as outlined in this document, for claims arising from the negligent acts and/or omissions of the Contractor, their subcontractor(s) and/or supplier(s), and anyone directly or indirectly employed by them.

4. Umbrella Liability: Umbrella Liability Policy for not less than $5,000,000.

Insurance under Parts 5, 6 and 7 below will be required if indicated by an "X".

5. Installation Floater: Contractor shall maintain "All Risk" coverage for construction materials going to the job site, at temporary storage locations, and at the job site.

_X_ 6. Builder's Risk: Shall insure against "All Risk" of physical damage for losses including but not limited to: fire, explosion, hail, lightning, vandalism, malicious mischief, wind, collapse, riot, aircraft, theft, smoke and water damage (flood and hydrostatic pressure not excluded), during the Contract time, on a completed value basis and in an amount not less than the Contract price totaled in the bid. The Policy will include "Theft of Building Materials" and "Soft Costs" coverages.

7. Supplemental Insurance Coverage: Should the project require "supplemental" insurance coverage as deemed necessary by the Owner and/or Engineer, it shall be provided as outlined below:

Type of Insurance	**Limit Required**
a._____	$_____
b._____	$_____
c._____	$_____

Note: If "Contractor's Pollution Liability Insurance" is required as indicated above, both the OWNER and the CITY OF BERWYN, shall be named as "Additional Insureds" on a Primary Non-Contributory basis on that policy.

B. **Contractor's Deductibles and Self-Insured Retentions**
Any deductibles or self-insured retentions shall be the sole responsibility of the Contractor.

C. **Other Insurance Provisions**
The policies are to contain, or be endorsed to contain, the following provisions:
All Coverages: Each insurance policy required by this clause shall be endorsed to state that coverage shall not be suspended, voided, canceled, reduced in coverage or in limits except after thirty (30) days prior written notice has been given to the Owner and the Engineer. It shall be the Contractor's

responsibility to ensure that said Notice is delivered to both the Owner and the Engineer by Certified Mail, "Return Receipt Requested."

D. **Acceptability of Insurers**

Insurance is to be placed with insurers with an A.M. Best's rating of A-, VIII, or higher.

E. **Verification of Coverage**

1. Contractor's Insurance:

Contractor shall furnish the Owner and the Engineer with **"Certificates of Insurance"** evidencing coverage required by this Section. The **Certificates** for each insurance policy are to be signed by a person authorized by that insurer to bind coverage on its behalf. The **Certificates** shall be on standard forms provided by the insurance company or agent and are to be received and approved by the Owner and Engineer **before any work commences**. The Owner reserves the right to request full certified copies of the insurance policies. No manuscript policies will be allowed.

2. It should also be noted that the Contractor is required to provide all the coverages specified herein, as well as assume the obligations of the conditions and requirements as stated herein. **The mere acceptance of the Insurance Certificates/Binders by the Owner or the Engineer shall not relieve the Contractor from any obligation for providing the protection required in these Specifications.**

F. **Subcontractors**

Contractor shall include all Subcontractors as insureds under its policies or shall furnish separate Certificates for each Subcontractor. All coverages for Subcontractors shall be subject to all of the requirements stated herein, excluding the requirement for obtaining a separate "OCP Policy" as may be stated herein.

Basis of Payment: This work will not be paid for separately, but shall be considered incidental to the Contract. All insurance shall remain in full force and effect until the project has been accepted by the Owner, acceptance being defined elsewhere in these Specifications. Failure to procure and maintain the required insurance coverage shall be considered a breach of Contract.

7. ADDITIONS TO AND/OR DELETIONS FROM THE CONTRACT

The Owner has decided to solicit Bids in an effort to better determine the expected cost. After Bids are received, the Owner will make a determination as to whether the amount of the successful Bid is within, or in excess of, the budget.

Additions:

If Bids are opened and found to be within the amount budgeted for the project, a Contract will be awarded in the full amount of the Bid. The Owner reserves the right to increase the scope of the Project in order to spend the full amount budgeted. This work will be paid for at the appropriate unit prices bid.

Deductions:

If Bids are opened and found to be in excess of the amount budgeted for the project, the Owner may direct that the scope of the project be downsized, so as to keep costs within the budget. A Contract may still be awarded in the full amount of the Bid, and a Change Order will be processed indicating precisely which items of work will be deleted or decreased. The Contractor will still be paid at the same unit prices

bid for all work incorporated into the final project. No adjustments to the unit prices will be allowed for reduction in the scope as a result of this change.

8. PAYMENT OF EMPLOYEES; PREVAILING WAGE RATES

The Contractor, and its subcontractors, shall comply with the Prevailing Wage Act (820 ILCS 130/1 et seq.), as amended. The Contractor, and each subcontractor, shall keep, or cause to be kept, an accurate record showing the names and occupation of all laborers, workers and mechanics employed by the Contractor or its subcontractors, in connection with the Work and showing the actual hourly wages paid to each such person. The submittal of an invoice or payment request to the City shall constitute the Contractor's certification to the City that all the wages paid for the work covered by the invoice or payment request have been paid in compliance with the Prevailing Wage Act. Upon the written request of the City, the Contractor, and its subcontractors, shall provide a complete and accurate copy of the records establishing compliance with the Prevailing Wage Act and this paragraph.

This contract calls for the construction of a "public work," within the meaning of the Illinois Prevailing Wage Act, 820 ILCS 130/.01 et. seq. ("the Act"). The Act requires contractors and subcontractors to pay laborers, workers and mechanics performing services on public works projects no less than the "prevailing rate of wages" (hourly cash wages plus fringe benefits) in the county where the work is performed. For information regarding current prevailing wage rates, please refer to the Illinois Department of Labor's website at: http://www.state.il.us/agency/idol/rates/rates.HTM All contractors and subcontractors rendering services under this contract must comply with all requirements of the Act, including but not limited to, all wage, notice and record keeping duties.

It is the responsibility of the contractor to check the above mentioned website for the most up to date wages for that month in which the work has taken place and to pay accordingly. Further, it is the responsibility of the contractor to supply the City of Berwyn with certified payrolls for all work related to this contract. If you are unsure as to what a certified payroll sheet is that must be supplied, you may find one at the above mentioned website.

9. PROJECT BACKGROUND

The existing HVAC system at the Berwyn Police Station has not been performing to the satisfaction of the City. The existing building, along with the HVAC system, was designed and constructed in 1999. The City is interested in upgrading the existing HVAC controls and/or system components to improve functionality and comfort levels within the building. The existing HVAC system has not functioned properly for years and, as a minimum, the City has determined that the controls system will need to be upgraded/replaced. At this time, the City is only interested in replacing the HVAC controls and is not interested in modifying or upgrading other physical HVAC system components (duct work, vents, chillers, boilers, compressors, etc.). However, the system shall be designed to be expandable in the event of future improvements to the HVAC system or expansions of the existing building.

10. PROJECT SCOPE OF WORK

Contractor shall provide the following scope of services, as described by the drawings and specifications listed in Section 1 and attached to this RFP. The scope of work shall include, but not be limited to:

- Designing a replacement control system that improves functionality, minimizes the replacement of the existing control system components, and incorporates modern

components to replace obsolete technology. The system shall be expandable in the event that HVAC equipment is replaced, added, or additions to the building space are made.

- Developing shop drawings and submittals for Owner review which illustrate the method of integration and information to be transferred between systems.
- Furnishing and install a new server and workstation for the replacement control system. This shall include a new work station printer and any required software and/or licenses.
- Replacing control system devices as required to provide a fully functioning system.
- Providing all required wiring, conduit, and connectors in order to make the proposed system improvements.
- Providing installation and calibration, supervision, adjustments, and fine tuning necessary for complete and fully operational system.
- Providing all required testing to demonstrate the proper and complete functionality of the new system.
- Providing complete operation and maintenance data.

11. SUBMITTAL REQUIREMENTS

A. Firm Fixed Fee Proposal

Base Bid: Bidder shall provide a detailed proposal describing proposed improvements to the HVAC system and also the components that are to be re-used. Bidder shall provide a firm fixed fee for the proposed base scope of work. The firm fixed fee shall include all labor, materials, equipment, supervision, transportation, taxes and all other direct and indirect costs to provide the scope of services outlined in the base bid.

Alternate #1: Bidder shall provide a separate price to replace the existing Paragon system which controls the Firing Range. This will include the replacement of the controller and tie-ins to the BAS only. The existing gauges, field devices, and enclosure shall remain.

Alternate #2: Bidder shall provide a separate price to make repairs to the existing fire and smoke damper actuators. The scope of work to make these repairs is attached to this RFP. Pricing for Alternate #2 shall be provided in the form included in the attached scope of work.

B. Other Submittal Requirements

The following additional items shall be provided with the Bidder's proposal:

- Qualifications listed in Section 1.9 of specification 23 09 23 Direct-Digital Control System
- Proposed project schedule.
- Project organizational chart showing design and construction personnel.
- Resumes for key personnel.
- Examples of three design-build projects featuring HVAC improvements completed within the last three years.
- Certificate of Insurance indicating at least $15M in coverage (including Umbrella).

Bidder shall also provide a copy of Bidder's audited Experience Modification Rate (EMR).

C. Evaluation Criteria

Berwyn will select the Bidder whose proposal is judged to provide the "Best Value" and is most advantageous to Berwyn. Berwyn is not bound to accept the lowest priced Proposal if that Proposal is not in the best interest of Berwyn as determined by Berwyn in its sole discretion.

D. Qualifications

Berwyn is seeking proposals from qualified bidders who can meet the following criteria:

- Joint Venture (JV) submissions will not be allowed. Berwyn intends to award the project to a single-entity design-build contractor.
- The design-build contractor's office shall be located within 25 miles of the City of Berwyn.
- In-house electrical and engineering design staff.
- In-house construction management staff.
- Experience Modification Rate (EMR) less than 1.

Cook County Prevailing Wage for July 2015

(See explanation of column headings at bottom of wages)

Trade Name	RG	TYP	C	Base	FRMAN	M-F>8	OSA	OSH	H/W	Pensn	Vac	Trng
ASBESTOS ABT-GEN		ALL		39.400	39.950	1.5	1.5	2.0	13.98	10.72	0.000	0.500
ASBESTOS ABT-MEC		BLD		36.340	38.840	1.5	1.5	2.0	11.47	10.96	0.000	0.720
BOILERMAKER		BLD		47.070	51.300	2.0	2.0	2.0	6.970	18.13	0.000	0.400
BRICK MASON		BLD		43.780	48.160	1.5	1.5	2.0	10.05	14.43	0.000	1.030
CARPENTER		ALL		44.350	46.350	1.5	1.5	2.0	11.79	16.39	0.000	0.630
CEMENT MASON		ALL		43.750	45.750	2.0	1.5	2.0	13.05	14.45	0.000	0.480
CERAMIC TILE FNSHER		BLD		36.810	0.000	1.5	1.5	2.0	10.55	9.230	0.000	0.770
COMM. ELECT.		BLD		40.000	42.800	1.5	1.5	2.0	8.670	12.57	1.100	0.750
ELECTRIC PWR EQMT OP		ALL		46.100	51.100	1.5	1.5	2.0	10.76	14.87	0.000	0.460
ELECTRIC PWR GRNDMAN		ALL		37.050	52.500	1.5	2.0	2.0	8.630	12.28	0.000	0.370
ELECTRIC PWR LINEMAN		ALL		47.500	52.500	1.5	2.0	1.5	11.06	15.75	0.000	0.480
ELECTRICIAN		ALL		45.000	48.000	1.5	1.5	2.0	13.83	15.27	0.000	1.000
ELEVATOR CONSTRUCTOR		BLD		50.800	57.150	2.0	2.0	2.0	13.57	14.21	4.060	0.600
FENCE ERECTOR		ALL		37.340	39.340	1.5	1.5	2.0	13.05	12.06	0.000	0.300
GLAZIER		BLD		40.500	42.000	1.5	2.0	2.0	13.14	16.99	0.000	0.940
HT/FROST INSULATOR		BLD		48.450	50.950	1.5	1.5	2.0	11.47	12.16	0.000	0.720
IRON WORKER		ALL		44.200	46.200	2.0	2.0	2.0	13.65	21.14	0.000	0.350
LABORER		ALL		39.200	39.950	1.5	1.5	2.0	13.98	10.72	0.000	0.500
LATHER		ALL		44.350	46.350	1.5	1.5	2.0	11.79	16.39	0.000	0.630
MACHINIST		BLD		45.350	47.850	1.5	1.5	2.0	7.260	8.950	1.850	0.000
MARBLE FINISHERS		ALL		32.400	34.320	1.5	1.5	2.0	10.05	13.75	0.000	0.620
MARBLE MASON		BLD		43.030	47.330	1.5	1.5	2.0	10.05	14.10	0.000	0.780
MATERIAL TESTER I		ALL		29.200	0.000	1.5	1.5	2.0	13.98	10.72	0.000	0.500
MATERIALS TESTER II		ALL		34.200	0.000	1.5	1.5	2.0	13.98	10.72	0.000	0.500
MILLWRIGHT		ALL		44.350	46.350	1.5	1.5	2.0	11.79	16.39	0.000	0.630
OPERATING ENGINEER		BLD	1	48.100	52.100	2.0	2.0	2.0	17.55	12.65	1.900	1.250
OPERATING ENGINEER		BLD	2	46.800	52.100	2.0	2.0	2.0	17.55	12.65	1.900	1.250
OPERATING ENGINEER		BLD	3	44.250	52.100	2.0	2.0	2.0	17.55	12.65	1.900	1.250
OPERATING ENGINEER		BLD	4	42.500	52.100	2.0	2.0	2.0	17.55	12.65	1.900	1.250
OPERATING ENGINEER		BLD	5	51.850	52.100	2.0	2.0	2.0	17.55	12.65	1.900	1.250
OPERATING ENGINEER		BLD	6	49.100	52.100	2.0	2.0	2.0	17.55	12.65	1.900	1.250
OPERATING ENGINEER		BLD	7	51.100	52.100	2.0	2.0	2.0	17.55	12.65	1.900	1.250
OPERATING ENGINEER		FLT	1	53.600	53.600	1.5	1.5	2.0	17.10	11.80	1.900	1.250
OPERATING ENGINEER		FLT	2	52.100	53.600	1.5	1.5	2.0	17.10	11.05	1.900	1.250
OPERATING ENGINEER		FLT	3	46.400	53.600	1.5	1.5	2.0	17.10	11.80	1.900	1.250
OPERATING ENGINEER		FLT	4	38.550	53.600	1.5	1.5	2.0	17.10	11.80	1.900	1.250
OPERATING ENGINEER		FLT	5	55.100	53.600	1.5	1.5	2.0	17.10	11.80	1.900	1.250
OPERATING ENGINEER		FLT	6	35.000	35.000	1.5	1.5	2.0	16.60	11.05	1.900	1.250
OPERATING ENGINEER		HWY	1	46.300	50.300	1.5	1.5	2.0	17.55	12.65	1.900	1.250
OPERATING ENGINEER		HWY	2	45.750	50.300	1.5	1.5	2.0	17.55	12.65	1.900	1.250
OPERATING ENGINEER		HWY	3	43.700	50.300	1.5	1.5	2.0	17.55	12.65	1.900	1.250
OPERATING ENGINEER		HWY	4	42.300	50.300	1.5	1.5	2.0	17.55	12.65	1.900	1.250
OPERATING ENGINEER		HWY	5	41.100	50.300	1.5	1.5	2.0	17.55	12.65	1.900	1.250
OPERATING ENGINEER		HWY	6	49.300	50.300	1.5	1.5	2.0	17.55	12.65	1.900	1.250
OPERATING ENGINEER		HWY	7	47.300	50.300	1.5	1.5	2.0	17.55	12.65	1.900	1.250
ORNAMNTL IRON WORKER		ALL		45.000	47.500	2.0	2.0	2.0	13.55	17.94	0.000	0.650
PAINTER		ALL		41.750	46.500	1.5	1.5	1.5	11.50	11.10	0.000	0.770
PAINTER SIGNS		BLD		33.920	38.090	1.5	1.5	1.5	2.600	2.710	0.000	0.000
PILEDRIVER		ALL		44.350	46.350	1.5	1.5	2.0	11.79	16.39	0.000	0.630
PIPEFITTER		BLD		46.000	49.000	1.5	1.5	2.0	9.000	15.85	0.000	1.780
PLASTERER		BLD		43.430	46.040	1.5	1.5	2.0	13.05	14.43	0.000	1.020
PLUMBER		BLD		46.650	48.650	1.5	1.5	2.0	13.18	11.46	0.000	0.880
ROOFER		BLD		41.000	44.000	1.5	1.5	2.0	8.280	10.54	0.000	0.530
SHEETMETAL WORKER		BLD		42.230	45.610	1.5	1.5	2.0	10.53	20.68	0.000	0.720
SIGN HANGER		BLD		31.310	33.810	1.5	1.5	2.0	4.850	3.280	0.000	0.000
SPRINKLER FITTER		BLD		49.200	51.200	1.5	1.5	2.0	11.75	9.650	0.000	0.550

STEEL ERECTOR		ALL	42.070	44.070	2.0	2.0	2.0	13.45	19.59	0.000	0.350	
STONE MASON		BLD	43.780	48.160	1.5	1.5	2.0	10.05	14.43	0.000	1.030	
~~SURVEY WORKER~~		->NOT IN EFFECT		ALL	37.000	37.750	1.5	1.5	2.0	12.97	9.930	0.000 0.500
TERRAZZO FINISHER		BLD	38.040	0.000	1.5	1.5	2.0	10.55	11.22	0.000	0.720	
TERRAZZO MASON		BLD	41.880	44.880	1.5	1.5	2.0	10.55	12.51	0.000	0.940	
TILE MASON		BLD	43.840	47.840	1.5	1.5	2.0	10.55	11.40	0.000	0.990	
TRAFFIC SAFETY WRKR		HWY	32.750	34.350	1.5	1.5	2.0	6.550	6.450	0.000	0.500	
TRUCK DRIVER	E	ALL 1	35.480	35.680	1.5	1.5	2.0	8.350	10.50	0.000	0.150	
TRUCK DRIVER	E	ALL 2	34.100	34.500	1.5	1.5	2.0	8.150	8.500	0.000	0.150	
TRUCK DRIVER	E	ALL 3	34.300	34.500	1.5	1.5	2.0	8.150	8.500	0.000	0.150	
TRUCK DRIVER	E	ALL 4	34.500	34.500	1.5	1.5	2.0	8.150	8.500	0.000	0.150	
TRUCK DRIVER	W	ALL 1	35.600	35.800	1.5	1.5	1.5	8.250	9.140	0.000	0.150	
TRUCK DRIVER	W	ALL 2	32.700	33.100	1.5	1.5	2.0	6.500	4.350	0.000	0.000	
TRUCK DRIVER	W	ALL 3	32.900	33.100	1.5	1.5	2.0	6.500	4.350	0.000	0.000	
TRUCK DRIVER	W	ALL 4	33.100	33.100	1.5	1.5	2.0	6.500	4.350	0.000	0.000	
TUCKPOINTER		BLD	43.800	44.800	1.5	1.5	2.0	8.280	13.49	0.000	0.670	

Legend: RG (Region)
TYP (Trade Type - All,Highway,Building,Floating,Oil & Chip,Rivers)
C (Class)
Base (Base Wage Rate)
FRMAN (Foreman Rate)
M-F>8 (OT required for any hour greater than 8 worked each day, Mon through Fri.
OSA (Overtime (OT) is required for every hour worked on Saturday)
OSH (Overtime is required for every hour worked on Sunday and Holidays)
H/W (Health & Welfare Insurance)
Pensn (Pension)
Vac (Vacation)
Trng (Training)

Explanations

COOK COUNTY

The following list is considered as those days for which holiday rates of wages for work performed apply: New Years Day, Memorial Day, Fourth of July, Labor Day, Thanksgiving Day, Christmas Day and Veterans Day in some classifications/counties. Generally, any of these holidays which fall on a Sunday is celebrated on the following Monday. This then makes work performed on that Monday payable at the appropriate overtime rate for holiday pay. Common practice in a given local may alter certain days of celebration. If in doubt, please check with IDOL.

TRUCK DRIVERS (WEST) - That part of the county West of Barrington Road.

EXPLANATION OF CLASSES

ASBESTOS - GENERAL - removal of asbestos material/mold and hazardous materials from any place in a building, including mechanical systems where those mechanical systems are to be removed. This includes the removal of asbestos materials/mold and hazardous materials from ductwork or pipes in a building when the building is to be demolished at the time or at some close future date.
ASBESTOS - MECHANICAL - removal of asbestos material from mechanical systems, such as pipes, ducts, and boilers, where the mechanical systems are to remain.

CERAMIC TILE FINISHER

The grouting, cleaning, and polishing of all classes of tile, whether for interior or exterior purposes, all burned, glazed or unglazed products; all composition materials, granite tiles, warning detectable tiles, cement tiles, epoxy composite materials, pavers, glass, mosaics, fiberglass, and all substitute materials, for tile made in

tile-like units; all mixtures in tile like form of cement, metals, and other materials that are for and intended for use as a finished floor surface, stair treads, promenade roofs, walks, walls, ceilings, swimming pools, and all other places where tile is to form a finished interior or exterior. The mixing of all setting mortars including but not limited to thin-set mortars, epoxies, wall mud, and any other sand and cement mixtures or adhesives when used in the preparation, installation, repair, or maintenance of tile and/or similar materials. The handling and unloading of all sand, cement, lime, tile, fixtures, equipment, adhesives, or any other materials to be used in the preparation, installation, repair, or maintenance of tile and/or similar materials. Ceramic Tile Finishers shall fill all joints and voids regardless of method on all tile work, particularly and especially after installation of said tile work. Application of any and all protective coverings to all types of tile installations including, but not be limited to, all soap compounds, paper products, tapes, and all polyethylene coverings, plywood, masonite, cardboard, and any new type of products that may be used to protect tile installations, Blastrac equipment, and all floor scarifying equipment used in preparing floors to receive tile. The clean up and removal of all waste and materials. All demolition of existing tile floors and walls to be re-tiled.

COMMUNICATIONS ELECTRICIAN

Installation, operation, inspection, maintenance, repair and service of radio, television, recording, voice sound vision production and reproduction, telephone and telephone interconnect, facsimile, data apparatus, coaxial, fibre optic and wireless equipment, appliances and systems used for the transmission and reception of signals of any nature, business, domestic, commercial, education, entertainment, and residential purposes, including but not limited to, communication and telephone, electronic and sound equipment, fibre optic and data communication systems, and the performance of any task directly related to such installation or service whether at new or existing sites, such tasks to include the placing of wire and cable and electrical power conduit or other raceway work within the equipment room and pulling wire and/or cable through conduit and the installation of any incidental conduit, such that the employees covered hereby can complete any job in full.

MARBLE FINISHER

Loading and unloading trucks, distribution of all materials (all stone, sand, etc.), stocking of floors with material, performing all rigging for heavy work, the handling of all material that may be needed for the installation of such materials, building of scaffolding, polishing if needed, patching, waxing of material if damaged, pointing up, caulking, grouting and cleaning of marble, holding water on diamond or Carborundum blade or saw for setters cutting, use of tub saw or any other saw needed for preparation of material, drilling of holes for wires that anchor material set by setters, mixing up of molding plaster for installation of material, mixing up thin set for the installation of material, mixing up of sand to cement for the installation of material and such other work as may be required in helping a Marble Setter in the handling of all material in the erection or installation of interior marble, slate, travertine, art marble, serpentine, alberene stone, blue stone, granite and other stones (meaning as to stone any foreign or domestic materials as are specified and used in building interiors and exteriors and customarily known as stone in the trade), carrara, sanionyx, vitrolite and similar opaque glass and the laying of all marble tile, terrazzo tile, slate tile and precast tile, steps, risers treads, base, or any other materials that may be used as substitutes for any of the aforementioned materials and which are used on interior

and exterior which are installed in a similar manner.

MATERIAL TESTER I: Hand coring and drilling for testing of materials; field inspection of uncured concrete and asphalt.

MATERIAL TESTER II: Field inspection of welds, structural steel, fireproofing, masonry, soil, facade, reinforcing steel, formwork, cured concrete, and concrete and asphalt batch plants; adjusting proportions of bituminous mixtures.

OPERATING ENGINEER - BUILDING

Class 1. Asphalt Plant; Asphalt Spreader; Autograde; Backhoes with Caisson Attachment; Batch Plant; Benoto (requires Two Engineers); Boiler and Throttle Valve; Caisson Rigs; Central Redi-Mix Plant; Combination Back Hoe Front End-loader Machine; Compressor and Throttle Valve; Concrete Breaker (Truck Mounted); Concrete Conveyor; Concrete Conveyor (Truck Mounted); Concrete Paver Over 27E cu. ft; Concrete Paver 27E cu. ft. and Under: Concrete Placer; Concrete Placing Boom; Concrete Pump (Truck Mounted); Concrete Tower; Cranes, All; Cranes, Hammerhead; Cranes, (GCI and similar Type); Creter Crane; Spider Crane; Crusher, Stone, etc.; Derricks, All; Derricks, Traveling; Formless Curb and Gutter Machine; Grader, Elevating; Grouting Machines; Heavy Duty Self-Propelled Transporter or Prime Mover; Highlift Shovels or Front Endloader 2-1/4 yd. and over; Hoists, Elevators, outside type rack and pinion and similar machines; Hoists, One, Two and Three Drum; Hoists, Two Tugger One Floor; Hydraulic Backhoes; Hydraulic Boom Trucks; Hydro Vac (and similar equipment); Locomotives, All; Motor Patrol; Lubrication Technician; Manipulators; Pile Drivers and Skid Rig; Post Hole Digger; Pre-Stress Machine; Pump Cretes Dual Ram; Pump Cretes: Squeeze Cretes-Screw Type Pumps; Gypsum Bulker and Pump; Raised and Blind Hole Drill; Roto Mill Grinder; Scoops - Tractor Drawn; Slip-Form Paver; Straddle Buggies; Operation of Tie Back Machine; Tournapull; Tractor with Boom and Side Boom; Trenching Machines.

Class 2. Boilers; Broom, All Power Propelled; Bulldozers; Concrete Mixer (Two Bag and Over); Conveyor, Portable; Forklift Trucks; Highlift Shovels or Front Endloaders under 2-1/4 yd.; Hoists, Automatic; Hoists, Inside Elevators; Hoists, Sewer Dragging Machine; Hoists, Tugger Single Drum; Laser Screed; Rock Drill (Self-Propelled); Rock Drill (Truck Mounted); Rollers, All; Steam Generators; Tractors, All; Tractor Drawn Vibratory Roller; Winch Trucks with "A" Frame.

Class 3. Air Compressor; Combination Small Equipment Operator; Generators; Heaters, Mechanical; Hoists, Inside Elevators (remodeling or renovation work); Hydraulic Power Units (Pile Driving, Extracting, and Drilling); Pumps, over 3" (1 to 3 not to exceed a total of 300 ft.); Low Boys; Pumps, Well Points; Welding Machines (2 through 5); Winches, 4 Small Electric Drill Winches.

Class 4. Bobcats and/or other Skid Steer Loaders; Oilers; and Brick Forklift.

Class 5. Assistant Craft Foreman.

Class 6. Gradall.

Class 7. Mechanics; Welders.

OPERATING ENGINEERS - HIGHWAY CONSTRUCTION

Class 1. Asphalt Plant; Asphalt Heater and Planer Combination; Asphalt

Heater Scarfire; Asphalt Spreader; Autograder/GOMACO or other similar type machines: ABG Paver; Backhoes with Caisson Attachment; Ballast Regulator; Belt Loader; Caisson Rigs; Car Dumper; Central Redi-Mix Plant; Combination Backhoe Front Endloader Machine, (1 cu. yd. Backhoe Bucket or over or with attachments); Concrete Breaker (Truck Mounted); Concrete Conveyor; Concrete Paver over 27E cu. ft.; Concrete Placer; Concrete Tube Float; Cranes, all attachments; Cranes, Tower Cranes of all types: Creter Crane: Spider Crane; Crusher, Stone, etc.; Derricks, All; Derrick Boats; Derricks, Traveling; Dredges; Elevators, Outside type Rack & Pinion and Similar Machines; Formless Curb and Gutter Machine; Grader, Elevating; Grader, Motor Grader, Motor Patrol, Auto Patrol, Form Grader, Pull Grader, Subgrader; Guard Rail Post Driver Truck Mounted; Hoists, One, Two and Three Drum; Heavy Duty Self-Propelled Transporter or Prime Mover; Hydraulic Backhoes; Backhoes with shear attachments up to 40' of boom reach; Lubrication Technician; Manipulators; Mucking Machine; Pile Drivers and Skid Rig; Pre-Stress Machine; Pump Cretes Dual Ram; Rock Drill - Crawler or Skid Rig; Rock Drill - Truck Mounted; Rock/Track Tamper; Roto Mill Grinder; Slip-Form Paver; Snow Melters; Soil Test Drill Rig (Truck Mounted); Straddle Buggies; Hydraulic Telescoping Form (Tunnel); Operation of Tieback Machine; Tractor Drawn Belt Loader; Tractor Drawn Belt Loader (with attached pusher - two engineers); Tractor with Boom; Tractaire with Attachments; Traffic Barrier Transfer Machine; Trenching; Truck Mounted Concrete Pump with Boom; Raised or Blind Hole Drills (Tunnel Shaft); Underground Boring and/or Mining Machines 5 ft. in diameter and over tunnel, etc; Underground Boring and/or Mining Machines under 5 ft. in diameter; Wheel Excavator; Widener (APSCO).

Class 2. Batch Plant; Bituminous Mixer; Boiler and Throttle Valve; Bulldozers; Car Loader Trailing Conveyors; Combination Backhoe Front Endloader Machine (Less than 1 cu. yd. Backhoe Bucket or over or with attachments); Compressor and Throttle Valve; Compressor, Common Receiver (3); Concrete Breaker or Hydro Hammer; Concrete Grinding Machine; Concrete Mixer or Paver 7S Series to and including 27 cu. ft.; Concrete Spreader; Concrete Curing Machine, Burlap Machine, Belting Machine and Sealing Machine; Concrete Wheel Saw; Conveyor Muck Cars (Haglund or Similar Type); Drills, All; Finishing Machine - Concrete; Highlift Shovels or Front Endloader; Hoist - Sewer Dragging Machine; Hydraulic Boom Trucks (All Attachments); Hydro-Blaster; Hydro Excavating (excluding hose work); Laser Screed; All Locomotives, Dinky; Off-Road Hauling Units (including articulating) Non Self-Loading Ejection Dump; Pump Cretes: Squeeze Cretes - Screw Type Pumps, Gypsum Bulker and Pump; Roller, Asphalt; Rotary Snow Plows; Rototiller, Seaman, etc., self-propelled; Self-Propelled Compactor; Spreader - Chip - Stone, etc.; Scraper - Single/Twin Engine/Push and Pull; Scraper - Prime Mover in Tandem (Regardless of Size); Tractors pulling attachments, Sheeps Foot, Disc, Compactor, etc.; Tug Boats.

Class 3. Boilers; Brooms, All Power Propelled; Cement Supply Tender; Compressor, Common Receiver (2); Concrete Mixer (Two Bag and Over); Conveyor, Portable; Farm-Type Tractors Used for Mowing, Seeding, etc.; Forklift Trucks; Grouting Machine; Hoists, Automatic; Hoists, All Elevators; Hoists, Tugger Single Drum; Jeep Diggers; Low Boys; Pipe Jacking Machines; Post-Hole Digger; Power Saw, Concrete Power Driven; Pug Mills; Rollers, other than Asphalt; Seed and Straw Blower; Steam Generators; Stump Machine; Winch Trucks with "A" Frame; Work Boats; Tamper-Form-Motor Driven.

Class 4. Air Compressor; Combination - Small Equipment Operator; Directional Boring Machine; Generators; Heaters, Mechanical; Hydraulic Power Unit (Pile Driving, Extracting, or Drilling); Light Plants, All (1 through 5); Pumps, over 3" (1 to 3 not to exceed a total of 300 ft.); Pumps, Well Points; Vacuum Trucks (excluding hose work); Welding Machines (2 through 5); Winches, 4 Small Electric Drill Winches.

Class 5. SkidSteer Loader (all); Brick Forklifts; Oilers.

Class 6. Field Mechanics and Field Welders

Class 7. Dowell Machine with Air Compressor; Gradall and machines of like nature.

OPERATING ENGINEER - FLOATING

Class 1. Craft Foreman; Master Mechanic; Diver/Wet Tender; Engineer; Engineer (Hydraulic Dredge).

Class 2. Crane/Backhoe Operator; Boat Operator with towing endorsement; Mechanic/Welder; Assistant Engineer (Hydraulic Dredge); Leverman (Hydraulic Dredge); Diver Tender.

Class 3. Deck Equipment Operator, Machineryman, Maintenance of Crane (over 50 ton capacity) or Backhoe (115,000 lbs. or more); Tug/Launch Operator; Loader/Dozer and like equipment on Barge, Breakwater Wall, Slip/Dock, or Scow, Deck Machinery, etc.

Class 4. Deck Equipment Operator, Machineryman/Fireman (4 Equipment Units or More); Off Road Trucks; Deck Hand, Tug Engineer, Crane Maintenance (50 Ton Capacity and Under) or Backhoe Weighing (115,000 pounds or less); Assistant Tug Operator.

Class 5. Friction or Lattice Boom Cranes.

Class 6. ROV Pilot, ROV Tender

SURVEY WORKER - Operated survey equipment including data collectors, G.P.S. and robotic instruments, as well as conventional levels and transits.

TERRAZZO FINISHER

The handling of sand, cement, marble chips, and all other materials that may be used by the Mosaic Terrazzo Mechanic, and the mixing, grinding, grouting, cleaning and sealing of all Marble, Mosaic, and Terrazzo work, floors, base, stairs, and wainscoting by hand or machine, and in addition, assisting and aiding Marble, Masonic, and Terrazzo Mechanics.

TRAFFIC SAFETY

Work associated with barricades, horses and drums used to reduce lane usage on highway work, the installation and removal of temporary lane markings, and the installation and removal of temporary road signs.

TRUCK DRIVER - BUILDING, HEAVY AND HIGHWAY CONSTRUCTION - EAST & WEST

Class 1. Two or three Axle Trucks. A-frame Truck when used for transportation purposes; Air Compressors and Welding Machines, including those pulled by cars, pick-up trucks and tractors; Ambulances; Batch Gate Lockers; Batch Hopperman; Car and Truck Washers; Carry-alls; Fork Lifts and Hoisters; Helpers; Mechanics Helpers and Greasers; Oil Distributors 2-man operation; Pavement Breakers; Pole Trailer, up to 40 feet; Power Mower Tractors; Self-propelled Chip Spreader; Skipman; Slurry Trucks, 2-man operation; Slurry Truck Conveyor Operation, 2 or 3 man; Teamsters; Unskilled Dumpman; and Truck Drivers hauling warning lights, barricades, and portable toilets on the job site.

Class 2. Four axle trucks; Dump Crets and Adgetors under 7 yards; Dumpsters, Track Trucks, Euclids, Hug Bottom Dump Turnapulls or

Turnatrailers when pulling other than self-loading equipment or similar equipment under 16 cubic yards; Mixer Trucks under 7 yards; Ready-mix Plant Hopper Operator, and Winch Trucks, 2 Axles.

Class 3. Five axle trucks; Dump Crets and Adgetors 7 yards and over; Dumpsters, Track Trucks, Euclids, Hug Bottom Dump Turnatrailers or turnapulls when pulling other than self-loading equipment or similar equipment over 16 cubic yards; Explosives and/or Fission Material Trucks; Mixer Trucks 7 yards or over; Mobile Cranes while in transit; Oil Distributors, 1-man operation; Pole Trailer, over 40 feet; Pole and Expandable Trailers hauling material over 50 feet long; Slurry trucks, 1-man operation; Winch trucks, 3 axles or more; Mechanic--Truck Welder and Truck Painter.

Class 4. Six axle trucks; Dual-purpose vehicles, such as mounted crane trucks with hoist and accessories; Foreman; Master Mechanic; Self-loading equipment like P.B. and trucks with scoops on the front.

Other Classifications of Work:

For definitions of classifications not otherwise set out, the Department generally has on file such definitions which are available. If a task to be performed is not subject to one of the classifications of pay set out, the Department will upon being contacted state which neighboring county has such a classification and provide such rate, such rate being deemed to exist by reference in this document. If no neighboring county rate applies to the task, the Department shall undertake a special determination, such special determination being then deemed to have existed under this determination. If a project requires these, or any classification not listed, please contact IDOL at 217-782-1710 for wage rates or clarifications.

LANDSCAPING

Landscaping work falls under the existing classifications for laborer, operating engineer and truck driver. The work performed by landscape plantsman and landscape laborer is covered by the existing classification of laborer. The work performed by landscape operators (regardless of equipment used or its size) is covered by the classifications of operating engineer. The work performed by landscape truck drivers (regardless of size of truck driven) is covered by the classifications of truck driver.

MATERIAL TESTER & MATERIAL TESTER/INSPECTOR I AND II

Notwithstanding the difference in the classification title, the classification entitled "Material Tester I" involves the same job duties as the classification entitled "Material Tester/Inspector I". Likewise, the classification entitled "Material Tester II" involves the same job duties as the classification entitled "Material Tester/Inspector II".

SECTION 23 0913

INSTRUMENTATION AND CONTROL DEVICES FOR HVAC

PART 1 GENERAL

1.1 SECTION INCLUDES

A. Control panels.

B. Thermostats.

C. Humidistats.

D. Control panels.

E. Control valves.

F. Control valve operators.

G. Control dampers.

H. Control damper operators.

I. Miscellaneous accessories.

J. Controllers.

K. Sensors and input devices.

L. Output devices.

M. Power supplies and transformers.

N. Low-voltage cable.

O. Control Wiring and Power Connections

1.2 REFERENCE STANDARDS

A. AMCA 500-D - Laboratory Methods of Testing Dampers for Rating; 2012.

B. ASTM D1693 - Standard Test Method for Environmental Stress-Cracking of Ethylene Plastics; 2015.

C. NEMA 250 - Enclosures for Electrical Equipment (1000 Volts Maximum); 2014.

D. UL 94 - Tests for Flammability of Plastic Materials for Parts in Devices and Appliances; Current Edition, Including All Revisions.

E. ASHRAE 85 - Automatic Control Terminology for Heating, Ventilating, Air Conditioning.

F. ASME MC85.1 - Terminology for Automatic Control.

G. NEMA EMC1 - Energy Management Systems Definition.

H. NFPA 70 - National Electric Code.

I. NFPA 90A - Air Condition Systems.

J. NFPA 101 - Life Safety Code.

K. ANSI A117.1 Handicap Standard.

1.3 ADMINISTRATIVE REQUIREMENTS

A. Preinstallation Meeting: Conduct a preinstallation meeting one week before starting work of this section; require attendance by all affected installers, designers, and owner representative.

1.4 SUBMITTALS

A. Specification Compliance Review.

B. Shop drawings and product data shall be in original searchable PDF format, no scans excepted.

C. Product data shall be presented according to an included table of contents.

D. Product Data: Provide description and engineering data for each control system component. Include sizing as requested. Provide data for each system component and software module.
1. Manufacturer's printed data sheets for all control system components clearly identify data by component.
2. General catalog sheets, including details of construction, ratings, and dimensions for each component.

E. Shop Drawings: Indicate complete operating data, system drawings, wiring diagrams, and written detailed operational description of sequences.
1. Show complete details of interconnections between temperature control systems and control specified with equipment or systems.
2. Control drawings shall have a completed system architecture. Controllers and components inclusive to the control system as well as 3rd party controllers and components to be integrated and/or communicated with.
3. All components and controllers inclusive or 3rd party shall have a points list for each. Deviation from contract documents shall be reported to design team with alternates and/or a reason for deviation.
4. Provide valve schedules indicating size, type, design flow, valve capacity, pressure drop and CV value, identification, and part number.
5. Provide dampers schedule indicating dimension and descriptions of blank-offs, installation location, arrangement, velocities, static pressure drop, damper features, identification, and part number.
6. Provide a Master Bill of Materials, separate from the drawings, indicating all materials and components and there function, manufacturer, model number, etc.
7. Control panel locations indicated on plans.
8. Control panel interior layout drawings indicating the following:
   a. Overall panel size.
   b. Device locations and labeling within panel.
   c. Spare and space locations.
   d. Power supplies and transformers.
   e. Wiring and cabling pathways.

F. Clearly note the proposed deviations from specified sequences and equipment, and substantiate with written explanation.

G. Samples: Submit two of each type of room thermostat and cover.

H. Design Data: Provide design data for sizing of power supplies and transformers.

I. Manufacturer's Instructions: Provide for all manufactured components.

J. Operation and Maintenance Data: Include inspection period, cleaning methods, recommended cleaning materials, and calibration tolerances.

K. Project Record Documents: Record actual locations of control components, including panels, thermostats, and sensors. Accurately record actual location of control components, including panels, thermostats, and sensors.
   1. Revise shop drawings to reflect actual installation and operating sequences.

1.5 SUBMITTALS AT CLOSEOUT

A. Project Record Documents: Maintain documents at site during construction and submit at Contract Closeout.

B. Operation and Maintenance Data include:
   1. Red-mark "Record" control system drawings and then turn them over to the Owner's Representative.
   2. Provide directions for calibration, adjustment, and maintenance instructions for each type of component.
   3. Complete Index of Contents.
   4. Shop drawings of control system showing devices, interconnections between devices, and connections to items provided by others.
   5. Specifications data sheets on each device.

C. Warranty: Submit manufacturers warranty and ensure forms have been filled out in Owner s name and registered with manufacturer.

D. Maintenance Materials: Furnish the following for Owner's use in maintenance of project.
   1. Extra Thermostats and Other Exposed Sensors: One of each type.

1.6 QUALITY ASSURANCE

A. Designer Qualifications: Design system under direct supervision of a Professional Engineer experienced in design of this work and licensed at the State in which the Project is located.

B. Manufacturer Qualifications: Company specializing in manufacturing the Products specified in this section with minimum three years documented experience.

C. Installer Qualifications: Company specializing in performing the work of this section documented experienceapproved by manufacturer.

D. Products Requiring Electrical Connection: Listed and classified by Underwriters Laboratories Inc., as suitable for the purpose specified and indicated.

1.7 WARRANTY

A. Correct defective Work within a 30 day period after Substantial Completion.

B. The scope of work included in this section shall be guaranteed to be free from original defects in both material and workmanship for the period as indicated in the contract terms.

1.8 MAINTENANCE SERVICE

A. Provide service and maintenance of control system for two years from Date of Substantial Completion.

B. Provide complete service of controls systems, including call backs. Make minimum of 2 complete normal inspections of approximately 8 hours duration in addition to normal service calls to inspect, calibrate, and adjust controls, and submit written reports.

PART 2 PRODUCTS

2.1 PERFORMANCE, CAPACITIES AND CHARACTERISTICS

A. See Drawings for Equipment Schedules with Equipment Performance Requirements when capacities and characteristics are not indicated in the specifications.

2.2 EQUIPMENT - GENERAL

A. Products Requiring Electrical Connection: Listed and classified by Underwriters Laboratories Inc., as suitable for the purpose specified and indicated.

2.3 CONTROL PANELS

A. Primary DDC panels as follows:
1. Existing control panels shall be used when possible, each additional panel, wiring, location shall be reviewed and approved by design team and owner.
2. It is acceptable to wire the following systems into any of the Primary DDC panels:
a. Miscellaneous alarm monitoring (i.e. ATS, leak, temperature, light …etc.)
b. Miscellaneous equipment (i.e. Unit Heater, Domestic Water Heater, Standalone Dampers …etc.)
3. Motors in motor control centers shall be controlled from the DDC controller associated with HVAC system. It shall not be acceptable to control all motors in a MCC from one DDC controller dedicated to the MCC. The intent of this specification is that the loss of any one DDC controller shall not affect the operation of other HVAC systems, only for the points connected to the DDC controller.

B. Unitized cabinet type for each system under automatic control with relays and controls mounted in cabinet and temperature indicators, pilot lights, push buttons and switches flush on cabinet panel face.

C. Control panels shall meet the following minimum requirements:
1. Outdoors: Control panels located outdoors shall comply with NEMA 3R or 4X requirements.
2. Mechanical Rooms: Control panels located in mechanical or electrical rooms shall comply with NEMA 4 requirements.
3. Other Locations: Control panels in other locations, including but not limited to occupied spaces, above ceilings, and plenum returns shall comply with NEMA 1 requirement.
4. Control panels shall be constructed of steel or extruded aluminum with hinged door and keyed lock, with baked enamel finish of manufacturer's standard color.
5. Provide panels of adequate size to accommodate instruments for future expansion of approximately 25% beyond space required for this scope of work.
6. Cabling shall be terminated on rugged and easily accessible terminal strips. Each termination shall be clearly marked and shall be as detailed in the shop and record drawings.
7. Panels mounted on vibrating equipment, such as on heat pumps, shall have vibration isolation protection that ensures their satisfactory operation.

D. NEMA 250, general purpose utility enclosures with enamelled finished face panel.

E. Provide common keying for all panels.

2.4 CONTROL VALVES

A. General:

B. Existing control valves shall be used where applicable. Each additional shall be reviewed and approved by design team and owner.
   1. Fully proportioning, true equal percentage flow characteristic and provide near linear heat transfer control.
   2. Control valves shall be sized by the control and controlled equipment manufacturer, and shall be guaranteed to meet the loads, as specified.
   3. Control valves shall be suitable for the system flow conditions and close against pump shut off head.

C. Globe Pattern:
   1. Up to 2 inches (50 mm): Bronze body, bronze trim, rising stem, renewable composition disc, screwed ends with backseating capacity repackable under pressure.
   2. Over 2 inches (50 mm): Iron body, bronze trim, rising stem, plug-type disc, flanged ends, renewable seat and disc.
   3. Hydronic Systems:
      a. Rate for service pressure of 125 psig at 250 degrees F (860 kPa at 121 degrees C).
      b. Replaceable plugs and seats of brass.
      c. Modulating Valves: Size for 3 psig (20 kPa) maximum pressure drop at design flow rate.
      d. Two-Position Valves: Line size or size using a pressure differential of 1 psi.
      e. Two way valves shall have equal percentage characteristics, three way valves linear characteristics. Size two way valve operators to close valves against pump shut off head.
   4. Steam Systems:
      a. Rate for service pressure of 125 psig at 250 degrees F (860 kPa at 121 degrees C).
      b. Replaceable plugs and seats of stainless steel. Pressure drop across any steam valve at maximum flow shall be as shown on the Drawings.
      c. Two-Position Valves: Line size or sized using 10% of inlet gauge pressure.
      d. Modulating Valves:
         1) 15 PSIG or less inlet steam pressure, the pressure drop shall be 80% of inlet gauge pressure.
         2) Higher than 15 PSIG inlet steam pressure the pressure drop shall be 42% of the inlet absolute pressure.
      e. Valves shall have modified linear characteristics.

D. Ball Pattern:
   1. Up to 2 Inches (50 mm):
      a. Brass two piece body, full port, chrome plated brass ball, teflon seats and stuffing box ring, lever handle , solder ends with union.
   2. Over 2 Inches (50 mm):
      a. Ductile iron body, full port, stainless steel ball, teflon seat and stuffing box seals, , grooved ends.
   3. Operating and sizing criteria similar to Globe Valves.

E. Butterfly Pattern:
   1. Iron body, aluminum bronze disc, resilient replaceable seat for service to 180 degrees F (82 degrees C) lug ends, extended neck.

2. Hydronic Systems:
   a. Rate for service pressure of 125 psig at 250 degrees F (860 kPa at 121 degrees C).
   b. Size for 1 psig (7 kPa) maximum pressure drop at design flow rate.

2.5 CONTROL VALVE OPERATORS

A. The manufacturer shall warrant all components for a period of 1 year from the date of substantial completion.

B. Existing control valve operators shall be re-used where applicable. All additional operators shall be reviewed and approved by design team and owner.

C. Fail-Safe Operation: Mechanical, spring-return mechanism.
   1. Control Valve, Normal Fail-Safe, positions:
      a. Steam to building heat exchanger: NC
      b. AHU heating coil: NO
      c. AHU cooling coil: NC
      d. Terminal unit reheat coil: NC
      e. Radiation: NO
      f. Radiant floor heating: Bypass
      g. Humidifier: NC
      h. Water Source Heat Pump: NC

D. UL and CSA listed, manufactured under ISO 9001 International Quality Control Standards. Operators shall have reversing and manual override and be protected from overload at all angles of rotation. Provide required accessories for application.

E. Valves shall spring return to normal position as indicated on freeze, fire, or temperature protection.

F. Size for torque required for valve close off at 150 percent of total system (head) pressure for two-way valves; and 100 percent of pressure differential across the valve or 100 percent of total system (pump) head differential pressure for three-way valves.

G. Select operator for full shut off at maximum pump differential pressure.

H. Coupling: Directly couple end mount to stem, shaft, or ISO-style direct-coupled mounting pad.

I. Mounting: Actuators shall be capable of being mechanically and electrically paralleled to increase torque if required.

J. Overload Protection: Electronic overload or digital rotation-sensing circuitry without the use of end switches to deactivate the actuator at the end of rotation.

K. Power Requirements: Maximum 10 VA at 24-V ac or 8 W at 24-V dc.

L. Maximum 1 VA at 24-V ac or 1 W at 24-V dc.

M. Temperature Rating: -22 to +122ºF.

N. Housing: Minimum requirement NEMA type 2 / IP54 mounted in any orientation.

O. Product:
   1. Belimo

2.6 CONTROL DAMPERS

A. Manufacturers:
   1. Air Balance, Inc.
   2. American Warming and Ventilating.
   3. CESCO Products.
   4. Duro Dyne Corp.
   5. Greenheck.
   6. McGill AirFlow Corporation.
   7. METALAIRE, Inc.
   8. Nailor Industries Inc.
   9. Penn Ventilation Company, Inc.
   10. Ruskin Company.
   11. Tamco
   12. Vent Products Company, Inc.

B. Existing dampers shall be reused where applicable. All additional dampers shall be reviewed and approved by design team and owner.

C. Dampers used for throttling airflow shall be of the opposed blade type arranged for normally open or normally closed operation, as required. The damper is to be sized so that when wide open, the pressure drop is a sufficient amount of its close-off pressure drop to shift the characteristic curve to near linear.

D. Dampers used for mixing of airstreams (OA & RA) shall be parallel blade type arranged for mixing, with blades directing the airstreams together.

E. Multiple section dampers may be jack shafted to allow mounting of direct-connect electronic actuators. Each end of the jack shaft shall receive at least one actuator to reduce jack shaft twist.

F. Airfoil blade dampers of double-skin construction with linkage out of the air stream shall be used whenever the damper face velocity exceeds 1500 fpm or system pressure exceeds 2.5 inches w.c., but no more than 4000 fpm or 6 inches w.c.

G. Performance: Test in accordance with AMCA 500-D.

H. Frames: Extruded aluminum, welded or riveted channel with corner reinforcement, minimum 16 gauge (16 mm).

I. Blades: Extruded aluminum, maximum blade size 8 inches (200 mm) wide, 48 inches (1200 mm) long, minimum 22 gage, 0.0299 inch (0.76 mm), attached to minimum 1/2 inch (13 mm) shafts with set screws.
   1. Outdoor and relief air damper blades shall be internally insulated. Insulating factor shall be R-2.29.

J. Blade Seals: EPDM or silicone mechanically attached, field replaceable.

K. Frame Seals: EPDM or silicone mechanically attached, field replaceable.

L. Jamb Seals: Spring stainless steel.

M. Shaft: 1/2" Stainless steel.

N. Shaft Bearings: Lubricant free, stainless steel, single row, ground, flanged, radial, antifriction type with extended inner race.

O. Linkage Bearings: Graphite impregnated nylon.

P. Leakage: Less than 1/2 percent, (8.5 cfm per sq. ft.) based on approach velocity of 2000 ft/min (10 m/sec) and 4 inches wg (1.0 kPa).

Q. Maximum Pressure Differential: 6 inches wg (1.5 kPa).

R. Temperature Limits: -40 to 200 degrees F (-40 to 93 degrees C).

2.7 CONTROL DAMPER OPERATORS

A. Existing control damper operators shall be reused where applicable. All additional operators shall be reviewed and approved by design team and owner.

B. General: Provide smooth proportional control with sufficient power for air velocities 20 percent greater than maximum design velocity and to provide tight seal against maximum system pressures. Provide spring return for two position control and for fail safe operation.
   1. Provide sufficient number of operators to achieve unrestricted movement throughout damper range.
   2. Provide one operator for maximum 36 sq ft (3.24 sq m) damper section.
   3. Size for torque required for damper seal at load conditions.

C. Control Damper Normal Fail-Safe position:
   1. Outdoor Air: NC
   2. Return Air: NO
   3. Relief Air: NC
   4. Terminal Unit: NC

D. The manufacturer shall warrant all components for a period of 5 years from the date of production, with the first two years unconditional.

E. Electronic Operators:UL and CSA listed, manufactured under ISO 9001 International Quality Control Standards. Operators shall have reversing and manual override and be protected from overload at all angles of rotation. Provide required accessories for application.

F. Coupling: V-bolt dual nut clamp with a V-shaped, toothed cradle.

G. Mounting: Actuators shall be capable of being mechanically and electrically paralleled to increase torque if required.

H. Overload Protection: Electronic overload or digital rotation-sensing circuitry without the use of end switches to prevent any damage to the actuator during a stall condition.

I. Fail-Safe Operation: Mechanical, spring-return mechanism.

J. Power Requirements (Spring Return): 24 V ac, maximum 10 VA at 24-V ac or 8 W at 24-V dc.

K. Proportional Actuators shall be fully programmable. Control input, position feedback and running time shall be factory or field programmable by use of external computer software Diagnostic feedback shall provide indications of hunting or oscillation, mechanical overload and mechanical travel. Programming shall be through an EEPROM without the use of actuator mounted switches.

L. Temperature Rating: -22 to +122 degrees F.

M. Housing: Minimum requirement NEMA type 2 / IP 54 mounted in any orientation.

N. Product:
   1. Belimo

2.8 HUMIDISTATS

A. Limit Duct Humidistat:
1. Insertion, two position type.
2. Throttling range: Adjustable 2 percent relative humidity.
3. Operating range: 20 to 80 percent.
4. Maximum temperature: 150 degrees F (65 degrees C).

2.9 INPUT/OUTPUT SENSORS

A. Temperature Sensors:
1. Use thermistor or RTD type temperature sensing elements with characteristics resistant to moisture, vibration, and other conditions consistent with the application without affecting accuracy and life expectancy.
2. Sensors and transmitters shall be provided as outlined in the input/output summary and sequence of operations.
3. Construct RTD of nickel or platinum with base resistance of 1000 ohms at 70 degrees F (26 degrees C).
4. Temperature sensing device must be compatible with project DDC controllers.
5. Performance Characteristics:
a. RTD:
1) Room Sensor Accuracy: Plus/minus 0.50 degrees F (0.28 degrees C) minimum.
2) Duct Averaging Accuracy: Plus/minus 0.50 degrees F (0.28 degrees C) minimum.
3) Water Accuracy: Plus/minus 0.5 degrees F (0.28 degrees C) minimum.
4) All Other Accuracy: Plus/minus 0.75 degrees F (0.42 degrees C) minimum.
5) Range: Minus 40 degrees F (Minus 40 degrees C) through 220 degrees F (104.4 degrees C) minimum.
b. Thermistor:
1) Accuracy (All): Plus/minus 0.36 degrees F (0.20 degrees C) minimum.
2) Range: Minus 25 degrees F (Minus 13 degrees C) through 122 degrees F (50 degrees C) minimum.
3) Heat Dissipation Constant: 2.7 mW per degree C.
c. Temperature Transmitter:
1) Accuracy: 0.10 degree F (0.06 degrees C) minimum or plus/minus 0.20 percent of span.
2) Output: 4 - 20 mA.
d. Sensing Range:
1) Provide limited range sensors if required to sense the range expected for a respective point.
2) Use RTD type sensors for extended ranges beyond minus 30 degrees F (minus 34.4 degrees) to 230 degrees F (114.4 degrees C).
3) Use temperature transmitters in conjunction with RTD's when RTD's are incompatible with DDC controller direct temperature input.
e. Wire Resistance:
1) Use appropriate wire size to limit temperature offset due to wire resistance to 1.0 degree F (0.56 degrees C) or use temperature transmitter when offset is greater than 1.0 degree F (0.56 degrees C) due to wire resistance.

2) Compensate for wire resistance in software input definition when feature is available in the DDC controller.

f. Thermowells:
   1) When thermowells are required, the sensor and well shall be supplied as a complete assembly, including well head and Greenfield fitting.
   2) Thermowells shall be pressure rated and constructed in accordance with the system working pressure.
   3) Thermowells and sensors shall be mounted in a threadolet or 1/2-inch NFT saddle and allow easy access to the sensor for repair or replacement.
   4) Thermowells shall be constructed of brass.

g. Room Sensors: Locking cover . Match room thermostats, mounted on 2x4 electrical box, with the following features:
   1) Digital zone temperature indication
   2) Occupied/unoccupied override switch
   3) Setpoint adjustment

h. Outside Air Sensors: Watertight inlet fitting shielded from direct rays of the sun.
   1) Outside air sensors shall be designed to withstand the environmental conditions to which they will be exposed. They shall also be provided with a solar shield.
   2) Sensors exposed to wind velocity pressures shall be shielded by a perforated plate that surrounds the sensor element.
   3) Temperature transmitters shall be of NEMA 3R construction and rated for ambient temperatures.

i. Room Security Sensors: Stainless steel cover plate with insulated back and security screws.

j. Room Temperature Sensors:
   1) Construct for surface or wall box mounting.
   2) Provide the following:
      a) Setpoint reset slide switch with an adjustable temperature range.
      b) Momentary override request push button for activation of after-hours operation.

k. Temperature Averaging Elements:
   1) For ductwork greater in any dimension than 48 inches and/or where air temperature stratification may exist, an averaging sensor with multiple sensing points shall be used.
   2) For plenum applications, such as mixed air temperature measurements, a string of sensors mounted across the plenum shall be used to account for stratification and/or air turbulence. The averaging string shall have a minimum of four sensing points per 12-foot-long segment.
   3) Capillary supports at the sides of the duct shall be provided to support the sensing string.
   4) Use on duct sensors for ductwork 10 sq ft (0.93 sq m) or larger.
   5) Use averaging elements where prone to stratification with sensor length 8 ft (2.5 m), or 16 ft (5 m).
   6) Provide for all mixed air and heating coil discharge sensors regardless of duct size.

l. Insertion Elements:
   1) Use in ducts not affected by temperature stratification or smaller than 11 sq inches (1 sq m).
   2) Provide dry type, insertion elements for liquids, installed in immersion wells, with minimum insertion length of 2.5 inches (60 mm).

B. Humidity Sensors:
1. Manufacturers:
   a. Veris Industries: www.veris.com
2. Duct Mounted Sensor: Milliamp type encased in a die-cast metal, weather-proof housing.
   a. Input Power, mA Type: Class 2; Loop powered 12-30 VDC only, 30 mA max.
   b. Output mA type: 2-wire, not polarity sensitive (clipped and capped).
   c. Humidity:
      1) HS Element: Replaceable digitally profiled thin-film capacitive .
      2) Accuracy 1 percent at 10 to 80 percent relative humidity. at 77 degrees F (25 degrees C), multi-point calibration, NIST traceable.
      3) Scaling: 0-100 percent RH.
   d. Temperature Effect:
      1) Duct Mounted: Plus/minus 0.18 percent per degree F (Plus/minus 0.10 percent per degree C).
      2) Outdoor Mounted: 4-20mA version: (0.0013x%RHx(TdegreeC-25)).
   e. Hysteresis: 1.5 percent typical.
   f. Linearity: Included in accuracy specification.
   g. Reset Rate: 24 hours.
   h. Stability: Plus/minus 1 percent @ 68 degrees F (20 degrees C) annually, for two years.
   i. Temperature Monitoring:
      1) Temperature Transmitter Output: Digital, 4-20mA (clipped & capped) or 0-5V/0-10V output.
         a) HO Transmitter Accuracy: Plus/minus 2.3 degrees F (Plus/minus 1.3 degrees C).
         b) HD Transmitter Accuracy: Plus/minus 1.0 degree F (Plus/minus 0.5 degrees C).
   j. Operating Environment:
      1) Operating Humidity Range: 0 to 100 percent RH noncondensing.
      2) Operating Temperature Range: Minus 40 degrees F (Minus 40 degrees C) to 122 degrees F (50 degrees C).
3. Wall Mounted Sensor: Milliamp type encased in a plastic housing.
   a. Input Power, mA Type: Class 2; Loop powered 12-30 VDC, 30 mA observed polarity.
   b. Output mA type: 24-20 mA, 2-wire, not polarity sensitive.
   c. Humidity:
      1) HS Element: Replaceable digitally profiled thin-film capacitive.
      2) Accuracy 2 percent at 10 to 80 percent relative humidity at 77 degrees F (25 degrees C).
      3) Scaling: 0-100 percent RH.
   d. Hysteresis: 1.5 percent typical.
   e. Linearity: Included in accuracy specification.
   f. Reset Rate: 24 hours.

g. Stability: Plus/minus 1 percent @ 68 degrees F (20 degrees C) annually, for two years.

h. Temperature:

1) Temperature Transmitter Output: Digital, 4-20mA (clipped & capped) or 0-5V/0-10V output.

i. Operating Environment:

1) Operating Humidity Range: 0 to 100 percent RH noncondensing.

2) Operating Temperature Range: 50 degrees F (10 degrees C) to 95 degrees F (30 degrees C).

C. Static Pressure (Air Pressure) Sensors:

1. Duct Mounted:

a. Input range shall be 0 to 2.0 inches w.g.

b. 4-20 mA output proportional to pressure input range.

c. +/- 5% accuracy.

d. Operating temperature range of 32 degrees F to 122 degrees F.

e. Easily accessible, integral non-interacting zero and span adjustment.

f. Minimum over pressure input protection of five times rated input.

g. Products:

1) Ashcroft

2) Modus, Model T40

3) Mamac series PR272.

2. Space:

a. Input range of -0.1 to +0.1 inches w.g.

b. 4-20 mA output proportional to pressure input range.

c. +/-2% accuracy of range.

d. Temperature range of -20 degrees F to 120 degrees F.

e. Easily accessible, integral non-interacting zero and span adjustment.

f. Over pressure input protection of five times rated input.

g. Space static pressure references shall be routed to the static pressure reference riser. Coordinate exact mounting locations of exterior static pressure reference points. Dampening pots for the reference riser shall be manufactured by Dwyer, Model A-306 or approved equal.

h. Products:

1) Ashcroft

2) Modus, Model T40.

3) Mamac series PR272 series.

3. Unidirectional with ranges not exceeding 150 percent of maximum expected input.

4. Temperature compensate with typical thermal error or 0.06 percent of full scale in temperature range of 40 to 100 degrees F (5 to 40 degrees C).

5. Accuracy: One percent of full scale with repeatability 0.3 percent.

D. Equipment Operation (Current) Sensors:

1. Status Inputs for Fans: Differential pressure switch with adjustable range of 0 to 5 inches wg (0 to 1250 Pa).

2. Status Inputs for Pumps: Differential pressure switch piped across pump with adjustable pressure differential range of 8 to 60 psi (50 to 400 kPa).

3. Status Inputs for Electric Motors: Current sensing relay with current transformers, adjustable and set to 175 percent of rated motor current.

E. Damper Position Indication: Potentiometer mounted in enclosure with adjustable crank arm assembly connected to damper to transmit 0 - 100 percent damper travel.

F. Carbon Dioxide Sensors, Duct and Wall:

1. Manufacturers:
   a. Veris Industries: www.veris.com
   b. Ventostat, Model 1071.
2. General: Provide non-dispersive infrared (NDIR), diffusion sampling CO2 sensors with integral transducers and linear output.
   a. Linear, CO2 Concentration Range Display: 0 to 2000 / 5000 ppm, programmable.
   b. Accuracy: Plus/minus 30 ppm or plus/minus 2 percent of measured value, measured at NTP.
   c. Repeatability: Plus/minus 20 ppm or plus/minus 2 percent of measured value.
   d. Response Time: Less than 60 seconds for 90 percent step change.
   e. Output:
      1) Analog: 4-20 mA.
   f. Communication Protocol: Modbus or BACnet.
      1) Connection: 2-wire, RS-485.
      2) Data Rate: 9600 bps.
      3) Parity: None.
3. Air Temperature: Range of 32 to 122 degrees F (0 to 50 degrees C).
4. Relative Humidity: Range of 0 to 95 percent (non-condensing).
5. Power Input: Class 2; 12 to 30VDC or 24VAC 50/60 Hz; 100mA max.
6. Calibration Characteristics:
   a. Automatically compensating algorithm for sensor drift due to sensor degradation.
   b. Maximum Drift: 2 percent.
   c. User calibratable with a minimum calibration interval of 5 years.
7. Construction:
   a. Sensor Chamber: Non-corrosive material for neutral effect on carbon dioxide sample.
   b. Provide duct mounted sensors with duct probe designed to protect sensing element from dust accumulation and mechanical damage.
   c. Housing: High impact plastic, UL 94 VO.
8. Optional Equipment
   a. Temperature Sensor:
      1) Solid state, integrated circuit; Accuracy: Plus/minus 1 degree F (0.5 degrees C); Resolution: 0.2 degrees F (0.1 degrees C); Output Range: 50 to 95 degrees F (10 to 35 degrees C).
9. Maximum response time to 100 ppm CO calibration gas: Two minutes.

G. Power Monitoring Devices:

1. Current measurement (amps) shall be by a combination current transformer and a current transducer. The current transformer shall be sized to reduce the full amperage of the monitored circuit to a maximum five-amp signal, which will be converted to a 4-20 mA DDC-compatible signal for use by the facility management system.
2. Current Transformer: A split core current transformer shall be provided to monitor motor amps.
   a. Operating Frequency: 50-400 Hz.
   b. Insulation: 0.6 kV class 10 kV BIL.
   c. UL recognized.
   d. Five-amp secondary.
   e. Select current ratio as appropriate for application.

f. Product:
1) Veris Industries.

3. Current Transducer: A current to voltage or current to mA transducer shall be provided. The current transducer shall include:
a. 6X input over amp rating for AC inrushes of up to 120 amps.
b. Manufactured to UL 1244.
c. Accuracy: +0.5 percent, Ripple +1.0 percent.
d. Minimum Load Resistance: 30 kohms.
e. Input: 0-20 amps.
f. Output: 4-20 mA.
g. Transducer shall be powered by a 24 VDC regulated power supply (24 VDC + 5 percent).
h. Product:
1) Veris Industries.

H. Status and Safety Switches:
1. Switches shall be provided to monitor equipment status, safety conditions, and generate alarms at the BMCS when a failure or abnormal condition occurs. Safety switches shall be provided with two sets of contacts and shall be interlock-wired to shut down respective equipment.
2. Current Sensing Switches:
a. The current sensing switch shall be self powered with solid-state circuitry and dry contact output. It shall consist of a current transformer, a solid-state current sensing unit, adjustable trip point, solid-state switch, SPDT relay, and an LED indicating the on or off status. A conductor of the load shall be passed through the window of the device. It shall accept overcurrent up to twice its trip point range.
b. Current sensing switches shall be used for run status for fans, pumps, and other miscellaneous motor loads.
c. Current sensing switches shall be calibrated to show a positive run status only when the motor is operating under load. A motor running with a broken belt or coupling shall indicate a negative run status.
d. Product:
1) Veris Industries.

I. Air Filter Status Switches:
1. Differential pressure switches used to monitor air filter status shall be of the automatic reset type with SPDT contacts rated for two amps at 120 VAC.
2. A complete installation kit shall be provided, including static pressure tops, tubing, fittings, and air filters.
3. Provide appropriate scale range and differential adjustment for intended service.

J. Air Pressure Safety Switches:
1. Air pressure safety switches shall be of the manual reset type with SPDT contacts rated for two amps at 120 VAC.
2. Pressure range shall be adjustable with appropriate scale range and differential adjustment for intended service.

K. Low Temperature Limit Switches:
1. The low temperature limit switch shall be of the manual reset type with double-pole/single-throw snap acting contacts rated for 16 amps at 120 VAC.
2. The sensing element shall be a minimum of 15 feet in length and shall react to the coldest 12-inch section. Element shall be mounted horizontally across duct in accordance with manufacturer's recommended installation procedures.

3. For large duct areas where the sensing element does not provide full coverage of the air stream, additional switches shall be provided as required to provide full protection of the air stream.

L. Air Flow Measuring Sensors:
1. Manufacturers:
   a. Air Monitor Corporation.
   b. Ebtron Inc.
2. General:
   a. Performance
      1) Measured airflow shall be density corrected for ambient temperature variances, and atmospheric pressure due to site altitude.
      2) Each measuring device shall be NIST traceable.
      3) Outdoor airflow measurement sensor shall measure airflow with an accuracy of ±5% of reading over a range of 150-2,000 FPM and not have its reading affected by the presence of directional or gusting wind.
      4) Each sensor shall have a temperature accuracy of ±0.15° F over an operating range of -20° F to 140° F.
   b. Provide one sensor for each measurement location indicated on the plans, schedules and/or control sequences or diagrams to determine the average airflow rate at each measurement location.
   c. Shall use the principle of thermal dispersion and provide minimum of one self-heated bead-in-glass thermistor and one zero power bead-in-glass thermistor at each sensing node.
   d. Low and high airflow and deadband alarm functions for compliance for LEED Outdoor Air Delivery Monitoring and ASHRAE Standard 189.1.
   e. Integral field calibration wizard to automate and simplify field setup for output adjustments when desired.
   f. Multiple independent grid measuring devices.
   g. Size of grid and quantity of measuring devices shall be appropriate for application to achieve the specified accuracy.
      1) No less than four measuring devices shall be provided for duct installations.
   h. Internal materials of the measuring devices and transducer suitable for continuous contact with air.
   i. Supply, Return, Outdoor and General Exhaust Air Sensing support grid shall be constructed of aluminum.
   j. Sensor node internal wiring connections shall be sealed and protected from the elements and suitable for direct exposure to water.
   k. Microprocessor-based digital transmitter/interface, 24V, 22 V-A
      1) Transmitter
         a) BTL listed.
         b) A remotely located microprocessor-based transmitter shall be provided for each measurement location.
         c) The transmitter shall be comprised of a main circuit board and interchangeable interface card.
            (1) All printed circuit board interconnects, edge fingers, and test points shall be gold plated.
            (2) All printed circuit boards shall be electroless nickel immersion gold (ENIG) plated.
            (3) All receptacle plug pins shall be gold plated.

d) Separate integration buffers shall be provided for display airflow output, airflow signal output (analog and network) and individual sensor output (IR-interface).

e) The transmitter shall be capable of providing a high and/or low airflow alarm.

f) The transmitter shall be capable of identifying a malfunction via the system status alarm and ignore any sensor node that is in a fault condition.

g) The transmitter shall be provided with a 16-character, alpha-numeric, LCD display.

(1) The total airflow rate, temperature, airflow alarm, individual fan alarm and system status alarm shall be visible on the display.

h) The transmitter shall be provided with two field selectable (0-5/0-10 VDC or 4-20mA), scalable, isolated and over-current protected analog output signals and [select one or both of the following]

(1) one isolated RS-485 (field selectable BACnet MS/TP or Modbus RTU) network connection; or

(2) one isolated Ethernet (simultaneously supported BACnet Ethernet or BACnet IP, Modbus TCP and TCP/IP) network connection.

i) Analog output signals shall provide the total airflow rate and be field configurable to output one of the following:

(1) temperature

(2) airflow alarm

(3) individual fan alarm; or

(4) system status alarm

j) Network communications shall provide the total airflow rate and temperature, airflow alarm, system status alarm, individual sensor node airflow rates and individual sensor node temperatures.

k) The transmitter shall be powered by 24 VAC and use a switching power supply that is over-current and over-voltage protected.

l) The transmitter shall use a timer circuit to ensure continuous operation in the event of brown-out and/or power failure.

M. Current Sensing Relay:

1. Rated for the applicable load.
2. Accessible trip adjustment over its complete operating range.
3. LED indication of relay status.
4. Long-term drift shall not exceed 5% of full range per 6 months.
5. Current transformer and relay shall have over current and over voltage protection.
6. Split core or solid core shall be sized for the application.
7. Relay shall be in a dustproof housing.
8. Accuracy: +/-2% of reading from 10% to 100% of full scale range, +/-2% full scale from 0 to 7.
9. 10% of full scale range.
10. Temperature range of 5 degrees F to 140 degrees F.
11. Product:
    a. Kele Model (S)CS1150A.
    b. Veris Hawkeye

N. Water Flowmeter - Insertion Type:
1. Stainless steel insertion probe with non-metallic rotors.
2. 24 +/-4 VDC @ 90 mA supply voltage.
3. +/- 2% accuracy of actual reading from 0.4 to 20 ft/s.
4. Turndown ratio of 30:1.
5. DC linearity of 0.1% of span.
6. Pulse output proportional to flowrate.
7. Insertion type with dual turbine blades.
8. Suitable for maximum flowrate in line.
9. Rated for as necessary to withstand the maximum pressure of the system.
10. Temperature range-standard: 180 degrees F continuous, 200 degrees F peak.
11. Bi-directional flow.
12. Product:
    a. Onicon, Model FB-1210.

O. Water Differential Pressure Sensor:
1. Cast aluminum NEMA 1 enclosure.
2. Output of 4-20 mA proportional to the pressure sensed.
3. Over pressure protection of five times the rated input.
4. Easily accessible, integral non-interacting zero and span adjustment.
5. Operating range of 0 to 30 psig.
6. Accuracy of +/- 2% of full scale reading.
7. Three valve by-pass and pressure test ports.
8. Product:
    a. Mamac series PR-282.
    b. Setra, Model 228-1.
    c. Veris Industries Alta Labs PW series.

P. Water Pressure Sensor:
1. Input range of 0 to 200 psi.
2. 4-20 mA output proportional to water pressure.
3. 0.5% accuracy of range.
4. Temperature range of 32 degrees F to 100 degrees F.
5. Easily accessible, integral non-interacting zero and span adjustment.
6. Over pressure input protection of two times rated input.
7. NEMA-4 rated fittings.
8. Stainless steel wetted parts.
9. Burst pressure of 5 times rated input
10. Long-term stability of .25 percent of full scale.
11. Shall be ANSI 300 rated.
12. Three valve by-pass and pressure test ports.
13. Product:
    a. Fisher/Rosemount.
    b. Precise Sensor.

Q. Water Level Sensor - Drip Plan
1. 1.25A @ 24 VAC
2. Maximum operating temperature: 150 degrees F.
3. Solid state electronic probe.
4. Horizontal/auxiliary mounting orientation.
5. UL Listed
6. Plenum Rated
7. Product:
    a. Kele SS/SP

R. Water Level Sensor - Stainless Steel Probe
   1. Multiple 1/4" Stainless Steel probes
   2. Sensing probes, mounted in PVC head:
      a. Fill level
      b. High level alarm
      c. Low level alarm
      d. Low-low level alarm for auxiliary safety shutdown
   3. Sensor head mounts in 3" sleeve
   4. Open dry contacts for interface to BMCS
   5. UL Listed
   6. Power transformer
   7. Modular control panel with visual indications:
      a. Power on
      b. Active fill
      c. High and low level alarm
      d. Auxiliary safety activation
      e. Self test feature
   8. Sensor head shall be mounted at the water level in a safe and convenient location with “U” bolts and mounting bracket.
   9. Product:
      a. Waterline Controls Unit, Model WLC-6100T-110-50.

S. Differential Pressure Switch - Air - Fan Shutdown:
   1. UL approved.
   2. SPDT or two SPST switches rated for 10 amps minimum at 120 Vac.
   3. Adjustable setpoint with a setpoint range of 0 to 10 inches w.g.
   4. 1/4-inch compression fittings suitable for copper sensing tubing.
   5. Temperature range of 0 degrees F to 160 degrees F.
   6. Manual reset.
   7. Product:
      a. Kele Model AFS-460.

T. Differential Pressure Switch - Air - Fan Status
   1. UL approved.
   2. SPDT or two SPST switches rated for 10 amps minimum at 120 Vac.
   3. Setpoint and range suitable for the associate fans system to sense operating status of fan.
   4. 1/4-inch compression fittings suitable for copper sensing tubing.
   5. Temperature range of 0 degrees F to 160 degrees F.
   6. Product:
      a. Cleveland Controls, Inc. Model AFS-222.

U. Ambient Light Level Sensor:
   1. Non-corroding and weatherproof housing with sensor shield suitable for exterior installations.
   2. 4-20 mA output proportional to the ambient light level.
   3. Accuracy at room temperature: +/-1%, 100 degrees F temperature: +/-2.5%.
   4. Solid-state photo diode circuitry and transducer as required.
   5. Mounted on the exterior of a north wall on the roof.
   6. Sensor reading from 0 to 750 footcandles.
   7. Temperature and humidity independent.
   8. Temperature range of 10 degrees F to 120 degrees F.
   9. Product:
      a. Multi-Point Celestial, Model MK7-B.

V. Wind Speed Sensor:
1. Measure with a three cup anemometer.
2. 4-20 mA output.
3. +/-5% accuracy of range above 10 mph wind speed.
4. Standard range of 3-100 mph wind speed.
5. Operating temperature of -40 to 140 degrees F.
6. Operating power of 12-24 VDC 30 mA maximum.
7. Product:
   a. Kele & Associates, Model A70-SL.

W. Wind Direction Sensor:
1. Measure with a precision potentiometric wind vane.
2. 4-20 mA output.
3. +/-10 degree accuracy range.
4. Standard range of 0-360 degrees.
5. Operating temperature of -40 to 140 degrees F.
6. Operating power of 12-24 VDC 30 mA maximum.
7. Product:
   a. Kele & Associates, Model A70-DL.

X. Emergency Fan Operation Switch:
1. Yellow cover plate.
2. Red illuminated latching type mushroom activation button.
3. Labeled “EMERGENCY VENTILATION”.
4. Clear polycarbonate tamper proof cover.
5. SPST contacts.
6. Product:
   a. Safety Technologies International STI Stopper Station with Mini Stopper II.

Y. Emergency Plant Shutdown Switch:
1. Blue cover plate.
2. Red illuminated latching type mushroom activation button.
3. Labeled “EMERGENCY PLANT SHUTDOWN”.
4. Clear polycarbonate tamper proof cover.
5. SPST contacts.
6. Product:
   a. Safety Technologies International STI Stopper Station with Mini Stopper II.

2.10 THERMOSTATS

A. Line Voltage Thermostats:
1. Integral manual On/Off/Auto selector switch, single or two pole as required.
2. Dead band: Maximum 2 degrees F (one degree C).
3. Cover: Locking with set point adjustment, with thermometer.
4. Rating: Motor load.

2.11 TRANSMITTERS

A. Building Static Pressure Transmitter:
1. One pipe, direct acting, double bell, scale range 0.01 to 6.0 inch wg (.0025 to 1.5 kPa) positive or negative, and sensitivity of 0.0005 inch wg (0.125 Pa). Transmit electronic signal to receiver with matching scale range.

B. Pressure Transmitters:
1. Manufacturers:
a. Veris PW Series with 3-valve manifold.
b. Sentra Model 231 with 3-valve manifold.
2. One pipe direct acting indicating type for gas, liquid, or steam service, range suitable for system, proportional electronic output.
3. Proportional output adjustable, 0-10vdc, 2-10vdc, 4-20ma. Selectable supply voltage 24vdc, 24vac.If wiring exceeds 300 ft, 4-20ma signal must be used.
4. Configuration selections shall include, port swapping, unidirectional, bidirectional, with multilevel pressure range selection.
5. Dual sensor.
6. Bypass manifold or 3-valve manifold for service and commissioning.

C. Temperature Transmitters:
1. One pipe, directly proportional output signal to measured variable, linearity within plus or minus 1/2 percent of range for 200 degree F (93 degrees C) span and plus or minus 1 percent for 50 degree F (10 degrees C) span, with 50 degrees F (10 degree C). temperature range, compensated bulb, averaging capillary, or rod and tube operation on 20 psig (138 kPa) input pressure and 3 to 15 psig (20 to 100 kPa) output.

D. Humidity Transmitters:
1. One pipe, directly proportioned output signal to measured variable, linearity within plus or minus 1 percent for 70 percent relative humidity span, capable of withstanding 95 percent relative humidity without loss of calibration.

2.12 CONTROLLERS

A. Local Control Panels:
1. Factory constructed, incorporating the FMS manufacturer's standard designs and layouts.
2. UL inspected and listed as an assembly and carry a UL 508 label listing compliance.
3. Fully enclosed, with subpanel, hinged door, and slotted flush latch.
4. Control panels shall consist of the DDC controller(s), display module, and I/O devices - such as relays, transducers, etc. - that are not required to be located external to the control panel due to function.
5. Display module shall be flush mounted in the panel face unless otherwise noted.
6. All I/O connections shall be extended to a numbered, color-coded, and labeled terminal strip for ease of maintenance and expansion. Wiring to I/O devices shall be made from this terminal strip.
7. All other wiring in the panel, internal and external, shall be made to additional line or low-voltage, color-coded, and labeled terminal strips.
8. Low and line voltage wiring shall be segregated.
9. Terminal strips and wiring shall be UL listed, 300-volt service, and provide adequate clearance for field wiring.
10. Wiring for every control panel shall follow a common color-coded format. All terminal strip color coding and numbering shall follow a common format.
11. All wiring shall be neatly installed in plastic trays or tie-wrapped.
12. A convenience 120 VAC duplex receptacle, fused on/off power switch, and required transformers shall be provided in each enclosure.

B. Control Relays:
1. Control pilot relays shall be of a modular plug-in design with retaining springs or clips.
2. Mounting bases shall be snap mount.

3. DPDT, 3PDT, or 4PDT relays shall be provided, as appropriate for application.
4. Contacts shall be rated for 10 amps at 120 VAC.
5. Relays shall have an integral indicator light and check button.

2.13 POWER SUPPLIES AND TRANSFORMERS

A. DC Power Supplies:
1. DC power supplies shall be sized for the connected device load. Total rated load shall not exceed 75 percent of the rated capacity of the power supply.
2. Input: 120 VAC +10 percent, 60 Hz.
3. Output: 24 VDC.
4. Line Regulation: +0.05 percent for 10 percent line change.
5. Load Regulation: +0.05 percent for 50 percent load change.
6. Ripple and Noise: 1 mV rms, 5 mV peak to peak.
7. An appropriately sized fuse and fuse block shall be provided and located next to the power supply.
8. A power disconnect switch shall be provided next to the power supply.

B. Transformers:
1. Sized to provide volts and amps as required for connected load.
2. Input voltage shall be as required for the specific application.

C. Uninterruptable Emergency Power Supplies (UPS):
1. Output:
   a. Output Power Capacity: 1920 Watts / 1920 VA
   b. Max Configurable Power: 1980 Watts / 2200 VA
   c. Nominal Output Voltage: 120V
   d. Output Voltage Distortion: Less than 5%
   e. Output Frequency (sync to mains): 50/60Hz +/- 3 Hz
   f. Topology: Line Interactive
   g. Waveform Type: Sine wave
   h. Output Connections: (8) NEMA 5-15R, (2) NEMA 5-20R
2. Input:
   a. Nominal Input Voltage: 120V
   b. Input Frequency: 50/60 Hz +/- 3 Hz (auto sensing)
   c. Input Connections: NEMA 5-20P
   d. Cord Length: 6 feet (1.83 meters)
   e. Input voltage range for main operations: 82 - 144V
   f. Input voltage adjustable range for mains operation: 75 - 154V
3. Batteries & Runtime:
   a. Battery Type: Maintenance-free sealed Lead-Acid battery with suspended electrolyte : leakproof
   b. Typical recharge time: 3 hour(s)
4. Energy Use/Efficiency:

	Load	Efficiency
a.		
b.	25%	97.4%
c.	50%	98.2%
d.	75%	98.2%
e.	100%	98.1%

5. Communications & Management:
   a. Interface Port(s): (1) SmartSlot
   b. Control panel: Multi-function LCD status and control console
   c. Audible Alarm: Alarm when on battery : distinctive low battery alarm : configurable delays
   d. Emergency Power Off (EPO)

6. Surge Protection and Filtering:
   a. Surge energy rating: 530 Joules
   b. Filtering: Full time multi-pole noise filtering : 0.3% IEEE surge let-through : zero clamping response time : meets UL 1449
7. Environmental:
   a. Operating Environment: 32 - 104 °F
   b. Operating Relative Humidity: 0 - 95%
   c. Operating Elevation: 0-10000 feet
   d. Storage Temperature: 5 - 113 °F
   e. Storage Relative Humidity: 0 - 95%
   f. Storage Elevation: 0-50000 feet
   g. Audible noise at 1 meter from surface of unit: 45.00 dBA
   h. Online Thermal Dissipation: 275.00 BTU/h
8. Conformance:
   a. Regulatory Approvals: CSA, ENERGY STAR (USA), FCC Part 15 Class A, UL 1778
   b. Standard Warranty: 3 years repair or replace (excluding battery) and 2 year for battery, optional on-site warranties available, optional extended warranties available
9. Accessories:
   a. CD with software, Documentation CD, Smart UPS signalling RS-232 cable, USB cable
10. Product:
   a. APC Smart-UPS 2200VA LCD 120V

2.14 LOW VOLTAGE CONTROL WIRE AND CABLE

A. All wiring materials section shall be in accordance with the latest revision of the National Electrical Code and applicable local codes and shall carry the UL label where applicable.

B. Analog Input, Analog Output, Binary Input, Binary Output, 24 VAC, and General Purpose Cabling:
   1. Cable shall consist of copper conductors not less than #18 AWG stranded.
   2. Cable shall be two- or three-conductor twisted cable with a drain wire.
   3. Cable shall have a 100 percent overall shield.
   4. Cable shall be plenum rated.
   5. Cable shall meet or exceed NEC voltage rating of 300 volts.
   6. Cable shall be NEC type CMP.
   7. Cable shall meet or exceed UL temperature rating of +60 deg C.
   8. Cable shall be labeled at a minimum of every 18 inches with the DDC system manufacturer's name and the type of signal carried within the cable, i.e., analog input, analog output, binary input, binary output, 24 VAC.

C. Primary and Secondary Communications Network Cabling:
   1. Cable shall be of type recommended by the DDC system manufacturer.
   2. Cable shall be shielded.
   3. Cable shall be plenum rated.
   4. Cable shall meet or exceed NEC voltage rating of 150 volts.
   5. Cable shall meet or exceed UL temperature rating of +60 deg C.

PART 3 EXECUTION

3.1 EXAMINATION

A. Verify existing conditions before starting work.

B. Verify that systems are ready to receive work.

C. Beginning of installation means installer accepts existing conditions.

D. Sequence work to ensure installation of components is complementary to installation of similar components in other systems.

E. Coordinate installation of system components with installation of mechanical systems equipment such as air handling units and air terminal units.

F. Ensure installation of components is complementary to installation of similar components.

G. Coordinate installation of system components with installation of mechanical systems equipment such as air handling units and air terminal units.

H. Coordinate installation of devices, wiring, and other items with other trades.

I. Locate thermostat/sensors where they will not be affected by heat from other sources, such as direct rays of sun, pipes or ducts in wall, convectors, direct air currents from diffusers, light dimmers, and similar items.

J. Low temperature protection thermostat shall be located upstream of the cooling coil. The entire duct area shall be covered to detect low air temperature due to stratification.

K. Current sensing relay trip levels shall be set to indicate the motor running under load versus no load.

L. Verify wiring terminations at all devices and correct as required. Provide identification label for each termination.

3.2 INSTALLATION

A. Install in accordance with manufacturer's instructions.

B. Check and verify location of thermostats with plans and room details before installation. Locate 60 inches (1500 mm) above floor. Align with lighting switches and humidistats. Refer to Section 26 2726.

C. Mount freeze protection thermostats using flanges and element holders.

D. Mount outdoor reset thermostats and outdoor sensors indoors, with sensing elements outdoors with sun shield.

E. Provide thermowells for liquids and flanges for air bulb elements.

F. Provide guards on thermostats in entrances, public areas, and where indicated.

G. Provide valves with position indicators and with pilot positioners where sequenced with other controls.

H. Provide separate steam valves for each bank of coils. Provide two valves in parallel where steam load exceeds 1500 lb/hr (0.10 kg/s) with 1/3 - 2/3 load capacities sequenced with smaller valve opening first.

I. Provide mixing dampers of parallel blade construction arranged to mix streams. Provide separate minimum outside air damper section adjacent to return air dampers with separate damper motor.

J. Provide isolation (two position) dampers of parallel blade construction.

K. Install damper motors on outside of duct in warm areas. Do not install motors in locations at outdoor temperatures.

L. Mount control panels adjacent to associated equipment on vibration free walls or free standing angle iron supports. One cabinet may accommodate more than one system in same equipment room. Provide engraved plastic nameplates for instruments and controls inside cabinet and engraved plastic nameplates on cabinet face.

M. Install "hand/off/auto" selector switches to override automatic interlock controls when switch is in "hand" position.

N. Provide conduit and electrical wiring in accordance with Section 26 2717. Electrical material and installation shall be in accordance with appropriate requirements of Division 26.

3.3 CONTROL PANELS

A. Control panel for each system where more than one control device requires field mounting, (air handling units, exhaust fans, miscellaneous control systems including pump controls, heat exchanger controls, etc.). Single devices may be mounted on piping, wall or ductwork. Install local control panel where indicated on Drawings or suitable location adjacent to system served.

B. Mount panels on wall with suitable brackets or on self-supporting stand. Mount top of panels no higher than 6 ft above floor. Install panels so front cover door can swing fully open without interference.

C. Panels mounted on vibrating equipment, such as on heat pumps, shall have vibration isolation protection that ensures their satisfactory operation.

D. All control panels located in accessible areas be provided with keyed locks. Locks shall utilize a single master key. Provide 2 spare key sets to Owner.

E. Panel Layout:
1. Locate controllers in lower half of panel first and upper half second.
2. Locate terminal strips either horizontally in upper half of back panel or vertically. Do not locate terminal strips below 2'-0" or above 6' above finished floor.
3. Separate 24 VDC and 120 VAC, wire, cable, and devices by 6" minimum space.
4. Enclose wire and cable in wireways or bundle w/ wire ties and secure to back-panel. This does not apply to wire exiting wireways to terminal strips or panel mounted devices.
5. Space controllers according to manufacturer's requirements with 3" minimum between controllers and other devices on panel and 6" between controller front and door mounted devices. Ensure adequate space is allowed for device heat dissipation.

3.4 SENSORS AND INPUT/OUTPUT DEVICES

A. All input and output devices shall be installed per the manufacturer's recommendation.

B. Building Differential Air Pressure Applications: Transmitter's exterior sensing tip shall be installed with a shielded static air probe to reduce pressure fluctuations caused by wind. The interior tip shall be inconspicuous and located within a central corridor shown on the Drawings.

C. Outside Air Humidity Sensors: Outside air relative humidity sensors shall be installed with a rain-proof, perforated cover. The transmitter shall be installed in a NEMA 3R enclosure with seal-tight fittings and stainless steel bushings.

D. Outside Air Sensors: Outside air sensors shall be mounted on the north wall to minimize solar radiant heat impact or located in a continuous intake flow adequate to monitor outside air temperatures accurately. Sensors exposed to solar radiation must be installed with solar shields. Sensors exposed to wind velocity pressures shall be shielded by a perforated plate surrounding the sensor element.

E. Water Pressure Sensors: Install water pressure sensors and differential pressure sensors with three-valve by-pass and pressure test ports for use in calibration and testing.

F. Low Temperature Limit Switches: Mount element horizontally across duct in a serpentine pattern ensuring each square foot of coil is protected by one foot of sensor. For large duct areas where the sensing element does not provide full coverage of the air stream, provide additional switches as required to provide full protection of the air stream.

G. Duct Mount Sensors:
   1. Duct mount sensors shall mount in an electrical box through a hole in the duct and be positioned so as to be easily accessible for repair or replacement.
   2. Duct sensors shall be insertion type and constructed as a complete assembly, including lock nut and mounting plate.
   3. For outdoor air duct applications, a weatherproof mounting box with weatherproof cover and gasket shall be used.

3.5 ELECTRICAL WIRING

A. Install wiring in accordance with National Electric Code, ANSI/NFPA 70.

B. All wiring materials covered by this section shall be in accordance with the latest revision of the National Electrical Code and applicable local codes and shall carry the UL label where applicable. All wiring running exposed in air plenums shall be plenum cable.

C. Install wiring (low and line voltage) in metal raceways or conduit unless inside control cabinet or unit enclosures.
   1. For concealed and accessible areas, plenum-rated wiring and cabling may be used.

D. Low voltage wiring not installed in conduit shall be supported every five feet from the building structure utilizing metal hangers designed for this application. Wiring shall be installed parallel to the building structural lines. All wiring shall be installed in accordance with local code requirements. Exposed wiring shall only be allowed in concealed accessible locations.

E. Low voltage control wiring and 24 VAC can be run in the same conduit. Power wiring 120 VAC and greater must be in a separate conduit.

F. Fastening shall be secured to walls or ceilings by means of appropriate screws, expansion screws anchors, toggle bolts, hollow wall screw anchors, nylon expansion anchors, or expansion shields. All-purpose plastic anchors are not acceptable.

G. Control panels shall be mounted on vibration-free walls or freestanding structural supports. Panels shall be located as indicated or approved by the Owner's Representative.

H. Locate circuits, relays, transformers, or other equipment that contains or must be connected to voltages exceeding 130 volts, in separate cabinets, which may be adjacent to control panels; permanently label "DANGER 277 VOLTS" or appropriate volts.

I. All wiring in mechanical rooms shall be in conduit. Minimum control wiring conduit size shall be 3/4 inch.

J. Provide with 120v AC, 20 amp dedicated emergency power circuit to each programmable control unit, panel and transformer.

K. Provide with 120v AC, 20 amp dedicated emergency power circuit to each air terminal unit transformer.

L. Provide extension of 120v, 20 amp circuits and circuit breakers from emergency power panels for all equipment, transformers and panel power.

M. Provide local UPS power supplies for all system panels and equipment.

3.6 CONTROL WIRING AND POWER CONNECTIONS

A. Provide all incidental control wiring required to make the equipment or systems fully operational. Coordinate with equipment manufacture incidental wiring requirements.

B. Where shielded wire is used, it shall be terminated per wire, controller, and end device manufacturer recommendations.

C. Incidental control wiring includes but not limited to:
1. Air Handling Units:
   a. Fans
   b. Damper Operators
   c. Lights
   d. UVC
   e. Valve Operators
   f. Humidifier
2. Automated flue exhaust system
3. Boiler control system
4. Chillers (With or Without Remote Starters)
5. Cooling Towers
6. Electric Duct Heaters
7. Energy Recovery, Make-up Units and Ventilators
8. Equipment Motors Starters
9. Fan Coil Units
10. Fluid Coolers (With or without discharge dampers)
11. Furnaces, Blower Coils, Water Source Heat Pumps, Air to Air Heat Pumps and Condensing Units
    a. Provide 3/4 inch conduit with a minimum of eight distinctively colored or tagged #14 wires between units and remote panels or thermostats for control wiring
12. HVAC Controls (Including but not limited to):
    a. Control panels, control transformers, and any required 120 volt control power connections not shown on the electrical drawings.
       1) Include 120 volt connection from dedicated circuit in nearest general power panel or as indicated.
       2) Include 120 volt connection from dedicated circuit in nearest emergency power panel.
    b. Control Relays
    c. Fan Powered Air Terminal Units
    d. Air Terminal Units
    e. Control Dampers and Valves
    f. Temperature, Flow and Occupancy Sensors
    g. Flow and BTU Meters
    h. Current Sensors
    i. Transmitters

13. Loose Motor Starters
14. Manual Multi-Speed Switches (Furnished as an Accessory to Mechanical Equipment)
15. Motor Control Centers
16. Packaged Chillers
17. Packaged Rooftop Units, Packaged Exhaust Fan and Make-Up Air Systems
    a. Provide 3/4 inch conduit with a minimum of eight distinctively colored or tagged #14 wires between units and remote panels or thermostats for control wiring
18. Pushbutton Stations and Emergency Stop Switches
19. Pumps
20. Remote Monitoring and Control Panels (Provided by Equipment Manufacturers)
21. Smoke Dampers at Air Handling Units
22. Supply, Return and Exhaust Fans
23. Temporary Heating/Cooling Equipment
24. Unit Mounted Motor Starters, Contactors, Disconnect Switches, Thermal Overloads and Heaters
25. Variable Frequency Controls.

3.7 POWER SUPPLIES AND TRANSFORMERS

A. DC Power Supplies:
1. DC power supplies shall be sized for the connected device load. Total rated load shall not exceed 75 percent of the rated capacity of the power supply.
2. An appropriately sized fuse and fuse block shall be provided and located next to the power supply.
3. A power disconnect switch shall be provided next to the power supply.

B. Transformers:
1. Sized to provide volts and amps as required for connected load.
2. Input voltage shall be as required for the specific application.

C. Uninterruptable Emergency Power Supplies (UPS):
1. Provide UPS as required to maintain control system programming for a minimum of 20 minutes.

3.8 MAINTENANCE

A. Provide service and maintenance of control system for 1 years from Date of Substantial Completion.

B. Provide complete service of controls systems, including call backs, and submit written report of each service call.

C. In addition to normal service calls, make minimum of 2 complete normal inspections of approximately 4 hours duration to inspect, calibrate, and adjust controls annually.

3.9 DDC TESTING AND VERIFICATION

A. Perform the following field tests and inspections and prepare test reports:
1. Operational Test: After electrical circuitry has been energized, start units to confirm proper unit operation. Remove and replace malfunctioning units and retest.
2. Test and adjust controls and safeties.
3. Test calibration of controllers by disconnecting input sensors and stimulating operation with compatible signal generator.

4. Test each point through its full operating range to verify that safety and operating control set points are as required.
5. Test each control loop to verify stable mode of operation and compliance with sequence of operation. Adjust PID actions.
6. Test each system for compliance with sequence of operation.
7. Test software and hardware interlocks.

B. Verify that instruments are installed before calibration, testing, and loop or leak checks.

C. Check instruments for proper location and accessibility.

D. Check instrument installation for direction of flow, elevation, orientation, insertion depth, and other applicable considerations.

E. Check flow instruments. Inspect tag number and line and bore size, and verify that inlet side is identified and that meters are installed correctly.

F. Check temperature instruments and material and length of sensing elements.

G. Check control valves. Verify that they are in correct direction.

H. Check dampers. Verify that proper blade alignment, either parallel or opposed, has been provided. Verify that return and outdoor air damper blades are providing mixing of air streams.

I. Check DDC system as follows:
1. Verify that DDC controller power supply is from emergency power supply, if applicable.
2. Verify that wires at control panels are tagged with their service designation and approved tagging system.
3. Verify that spare I/O capacity has been provided.
4. Verify that DDC controllers are protected from power supply surges.

J. Replace damaged or malfunctioning controls and equipment and repeat testing procedures.

3.10 START-UP SERVICES

A. Verify proper location of each device and point-to-point system integrity. Correct as needed.

B. When installation is complete and automatic control system is placed in operation, adjust and calibrate all instruments and devices in system and ensure that system is operating in accord with specified sequences.

C. Diagnose component and system problems. Communicate irregularities to the appropriate contractor for correction.

D. Attend construction meetings as required to coordinate with other contractors and provide input during problem resolution.

3.11 IDENTIFICATION STANDARDS

A. Field Devices: All field devices shall be identified by a typed (not handwritten) securely attached tag label. This applies to all components not already labeled or existing. Any modifications or additions to existing wiring, end devices, controllers shall be tagged accordingly.

B. Controller Identification: All controllers shall be identified by typed (not handwritten) securely attached tag label.

C. Panel Identification: All local control panels shall be identified by a plastic engraved nameplate securely fastened to the outside of the controller enclosure.

D. Panel Devices: All panel devices shall be identified by a typed label securely fastened to the back plate of the local control panel.

E. Wire Identification: All low and line voltage control wiring shall be identified by a number or name, as referenced to the associated control diagram, at each end of the conductor cable. Identification number or name shall be permanently secured to the conductor or cable and shall be typed.

END OF SECTION

SECTION 23 0993

SEQUENCE OF OPERATIONS FOR HVAC CONTROLS

PART 1 GENERAL

1.1 SECTION INCLUDES

A. This section defines the manner and method by which controls function. Requirements for each type of control system operation are specified. Equipment, devices, and system components required for control systems are specified in other sections.

B. Sequence of operation for:
1. Air terminal units.
2. Heating water system.
3. Variable air volume air handling unit.
4. Single zone air handling unit. Firing Range AHU-3, AHU-2
5. Variable air volume terminal units.
6. Series fan-powered variable air volume terminal units.
7. Exhaust fans.
8. Packaged Roof Top Unit. RTU-1, RTU-2.
9. Cabinet heaters.
10. Refrigeration systems.
11. Unit heaters.

1.2 SYSTEM DESCRIPTION

A. The intent of this project is to replace the existing control system reusing as many components as applicable. End devices that are to be replaced must meet the specifications listed in sections 23 0913 and 23 0923 and also must be reviewed and approved by the design team and owner before installation if additional cost is required.

B. All sequences of operations included any packaged controls must be asbuilt and delivered to the owner.

C. Remote access owner is recommeded with minimum security protocols in place.

D. Remote "Read-Only" access for design team is recommended during the duration of warranty to better serve the owner with minimum security protocols in place.

1.3 SUBMITTALS

A. Specification Compliance Review.

B. Sequence of Operation Documentation: Submit written sequence of operation for entire HVAC system and each piece of equipment.

C. Existing design intent and additonal sequences to be asbuilt.
1. State each sequence in small segments and give each segment a unique number for referencing in Functional Test procedures; provide a complete description regardless of the completeness and clarity of the sequences specified in the contract documents.
2. Include at least the following sequences:
a. System off.
b. Start-up.
c. Warm-up mode.
d. Normal operating mode.

e. Unoccupied mode.
f. Shutdown.
g. Capacity control sequences and equipment staging.
h. Temperature and pressure control, such as setbacks, setups, resets, etc.
i. Detailed sequences for all control strategies, such as economizer control, optimum start/stop, staging, optimization, demand limiting, etc.
j. Effects of power or equipment failure with all standby component functions.
k. Sequences for all alarms and emergency shut downs.
l. Seasonal operational differences and recommendations.
m. Interactions and interlocks with other systems.

3. For packaged controlled equipment, include manufacturer's furnished sequence of operation amplified as required to describe the relationship between the packaged controls and the control system, indicating which points are adjustable control points and which points are only monitored.
4. Include schedules, if known.

D. Control System Diagrams: Submit graphic schematic of the control system showing each control component and each component controlled, monitored, or enabled.
1. Label with settings, adjustable range of control and limits.
2. Include flow diagrams for each control system, graphically depicting control logic.
3. Include the system and component layout of all equipment that the control system monitors, enables or controls, even if the equipment is primarily controlled by packaged or integral controls.
4. Include draft copies of graphic displays indicating mechanical system components, control system components, and controlled function status and value.
5. Include all monitoring, control and virtual points specified in elsewhere.
6. Include a key to all abbreviations.

E. Points List: Submit list of all control points indicating at least the following for each point.
1. Name of controlled system.
2. Point abbreviation.
3. Point description; such as dry bulb temperature, airflow, etc.
4. Display unit.
5. Control point or setpoint (Yes / No); i.e. a point that controls equipment and can have its setpoint changed.
6. Monitoring point (Yes / No); i.e. a point that does not control or contribute to the control of equipment but is used for operation, maintenance, or performance verification.
7. Intermediate point (Yes / No); i.e. a point whose value is used to make a calculation which then controls equipment, such as space temperatures that are averaged to a virtual point to control reset.
8. Calculated point (Yes / No); i.e. a “virtual” point generated from calculations of other point values.

F. Project Record Documents: Record actual locations of components and setpoints of controls, including changes to sequences made after submission of shop drawings.

PART 2 PRODUCTS - NOT USED

PART 3 EXECUTION

3.1 AIR TERMINAL UNITS

A. Single-Duct Variable Volume (Cooling Only):
1. System Off - When the system is off:
a. The primary air damper shall be closed.
2. Initiation of System Start-Up - The system shall be started:
a. Manually initiated by operator through BMCS.
b. Automatically by BMCS through occupancy schedule.
3. System Operation - After system start-up has been initiated the following shall occur:
a. The primary air damper shall modulate to the maximum primary airflow rate indicated to maintain the space cooling temperature setpoint.
4. System Shutdown - Shall be initiated as follows:
a. Manually initiated by operator through BMCS.
b. Automatically by BMCS through occupancy schedule.
5. System Setpoints - The setpoints shall be operator changeable and initially set as follows:
a. Space cooling temperature setpoint shall be 74 degrees F.
b. The minimum and maximum primary air flow setpoints shall be set to the design airflow setpoints as indicated in the contract documents.
c. The high and low temperature setpoints shall be set initially at 2 degrees F above/below the cooling temperature setpoint.
d. The occupant shall have the capability to adjust the space temperature setpoint through the space temperature sensor.
e. The programming shall limit user adjustment to + or - 2 degrees F of the base setpoint.
6. Alarms - The BMCS shall generate an alarm for the following conditions:
a. High temperature.
b. Low temperature.
7. Points List:
a. Analog Inputs:
1) Primary air flow.
2) Space temperature.
3) Space temperature setpoint adjust.
4) Discharge air temperature.
b. Analog Outputs:
1) Primary air damper.

B. Single-Duct Variable Volume with Heat:
1. System Off - When the system is off:
a. The primary air damper shall be closed.
b. The heating shall be closed or off.
2. Initiation of System Start-Up - The system shall be started:
a. Manually initiated by operator through BMCS.
b. Automatically by BMCS through occupancy schedule.
3. System Operation - After system start-up has been initiated the following shall occur:
a. The primary air damper shall modulate to the maximum primary airflow rate indicated to maintain the space cooling temperature setpoint.

b. When the space temperature falls below the space heating temperature setpoint the following shall occur:
   1) The primary air damper shall be set to the minimum primary air flow rate indicated.
   2) The heating water valve or electric coil controller shall modulate to maintain the space heating temperature setpoint.
   3) The discharge air temperature sensor shall limit discharge air temperature to no more than 20 degrees above space setpoint.
   4) Upon further call for heating, the primary air damper shall modulate to the maximum heating air flow rate indicated.
   5) VAV 0-2 and 1-8 shall have humidity control. If the space humidity is above 60%, the damper shall open to its maximum. Once the humidity drops to 50%, the damper shall resume normal control.
   6) VAV 0-2 electric duct heater shall be enabled/disabled by BAS based upon room temperature.
      a) BAS shall monitor heater status.
   7) VAV 0-2 isolation valve shall open during heating season and close during coolign season.

4. System Shutdown - Shall be initiated as follows:
   a. Manually initiated by operator through BMCS.
   b. Automatically by BMCS through occupancy schedule.

5. System Setpoints - The setpoints shall be operator changeable and initially set as follows:
   a. Space cooling temperature setpoint shall be 74 degrees F.
   b. Space heating temperature setpoint shall be 70 degrees F.
   c. The minimum and maximum primary air flow setpoints shall be set to the design airflow setpoints as indicated in the contract documents.
   d. The high and low temperature setpoints shall be set initially at 2 degrees F above/below the temperature setpoints.
   e. The occupant shall have the capability to adjust the space temperature setpoint through the space temperature sensor.
   f. The programming shall limit user adjustment to + or - 2 degrees F of the base setpoint.

6. Alarms - The BMCS shall generate an alarm for the following conditions:
   a. High temperature.
   b. Low temperature.

7. Points List:
   a. Analog Inputs:
      1) Primary air flow.
      2) Space temperature.
      3) Space temperature setpoint adjust.
      4) Discharge air temperature.
      5) VAV 0-2 Space Humidity.
   b. Analog Outputs:
      1) Primary air damper.
      2) Heating water valve or electric coil controller.
   c. Digital Inputs:
      1) VAV 0-2 EDH status.
   d. Digital Outputs:
      1) VAV 0-2 EDH start/stop.
      2) Iso Valve

C. Series Fan Powered:

1. System Off - When the system is off:
   a. The primary air damper shall be closed.
   b. The heating shall be closed of off
   c. The fan shall be off.
2. Initiation of System Start-Up - The system shall be started:
   a. Manually initiated by operator through BMCS.
   b. Automatically by BMCS through occupancy schedule.
   c. Automatically when requested to start as described below in the unoccupied mode of operation.
3. System Operation - After system start-up has been initiated the following shall occur:
   a. If the space temperature is below the heating setpoint the FPB shall start up in the warm-up mode. The warm-up mode of operation is the same as what is detailed below for the occupied mode of operation, except that the primary air damper shall be closed. The FPB shall switch from the warm-up mode to the occupied mode when both of the following events occur:
      1) The space temperature reaches the heating setpoint.
      2) The FPB is scheduled to be in the occupied mode.
   b. If the space temperature is above the cooling setpoint, the FPB shall start up in the normal occupied mode of operation as detailed below.
4. Occupied mode of operation:
   a. The fan shall be enabled.
   b. When the space temperature is above the occupied space temperature cooling setpoint the following shall occur:
      1) The primary air damper shall modulate between the minimum and maximum primary air flow setpoints to maintain the space cooling setpoint.
      2) Heating shall be closed or off.
   c. When the space temperature falls below the space heating temperature setpoint the following shall occur:
      1) The primary air damper shall be set to the minimum primary air flow rate. The heating water valve or electric coil controller shall not be enabled unless the FPB controller is calling the primary air flow rate to be at the minimum setpoint.
      2) The heating water valve or electric coil controller shall modulate to maintain the space heating temperature setpoint.
      3) The discharge air temperature sensor shall limit discharge air temperature to no more than 20 degrees above space setpoint.
      4) Upon further call for heating, the primary air damper shall modulate to the maximum heating air flow rate indicated.
      5) RF-1 shall be controlled by a wall mounted stat. When the room temperature exceeds 80 Deg F (adj.), the fan shall start. the status of RF-1 shall be monitored by the BAS.
5. Unoccupied mode of operation:
   a. The primary air damper and heating water valve shall be closed. The fan shall be off.
   b. If the space temperature falls below the unoccupied space heating temperature setpoint, the FPB shall start up and operate in the same manner as the warm-up mode detailed above. The FPB shall continue to operate in this mode until the system re-enters the occupied mode of operation.
   c. If the space temperature is above the unoccupied space cooling setpoint, and if the associated AHU is operating, the FPB shall start up and

operate in the same manner as the occupied mode to maintain the unoccupied space cooling setpoint. The FPB shall continue to operate in this mode until the system re-enters the occupied mode of operation.

6. System Shutdown - Shall be initiated as follows:
   a. Manually initiated by operator through BMCS.
   b. Automatically by BMCS through occupancy schedule.
   c. Automatically by BMCS on any building fire alarm activation.
7. System Setpoints - The setpoints shall be operator changeable and initially set as follows:
   a. Space cooling temperature setpoint shall be 74 degrees F.
   b. Space heating temperature setpoint shall be 70 degrees F.
   c. The unoccupied space cooling temperature setpoint shall be 85 degrees F.
   d. The unoccupied space heating temperature setpoint shall be 60 degrees F.
   e. The minimum and maximum primary air flow setpoints shall be set to the design airflow setpoints as indicated in the contract documents.
   f. The high and low temperature alarm setpoints shall be set initially at 2 degrees F above/below the temperature setpoints.
   g. The occupant shall have the capability to adjust the space temperature setpoint through the space temperature sensor.
   h. The programming shall limit user adjustment to + or - 2 degrees F of the base setpoint.
8. Alarms - The BMCS shall generate an alarm for the following conditions:
   a. High temperature.
   b. Low temperature.
9. Points List:
   a. Analog Inputs:
      1) Primary air flow.
      2) Space temperature.
      3) Space temperature setpoint adjust.
      4) Discharge air temperature.
   b. Digital Inputs:
      1) Fan status.
   c. Analog Outputs:
      1) Primary air damper.
      2) Heating water valve or electric coil controller
   d. Digital Outputs:
      1) Fan start/stop.

3.2 OPERATING SEQUENCES - GENERAL

A. Sequence of Control indicated illustrates basic control function only. Provide all control devices required for controlling air handling units, exhaust fans, physical plant equipment, terminal equipment, and all related items.

B. The Control Contractor shall perform the initial input of all required operational data for each point that is to be used based on information supplied to the Contractor by the Owner. The Contractor shall assist the Owner's staff in developing the schedule and shall demonstrate the operation of the system using the data.

C. Provide adequate English language notation in the software to assist the operator in understanding the intent of the programmed sequences.

D. The Control Contractor shall be responsible for the stable operation of all control loops. If the Control Contractor has not provided self-tuning PID control algorithms then the Control Contractor shall manually tune all control loops. Verify all control loops are stable whether or not they are self-tuning.

E. The Control Contractor shall provide any modifications to the operating sequences as requested by the Owner without additional costs until the final acceptance of the entire control system.

F. All outputs using PID control shall be adjusted to the actual range of end device. If VFC range is from 20% to 100%, output PID loop shall run from 20%-100% to eliminate spooling of PID outside actual operating range of end device.

G. Graphics shall represent actual range of outputs.

3.3 EQUIPMENT RUN TIME TOTALIZATION

A. Provide a software package that will accumulate the operating times for motors as selected by the operator using an interactive procedure. Any piece of equipment that has its status monitored by the building management control system (BMCS) shall be selectable for inclusion in this feature. It shall be possible to concurrently monitor the accumulated operating time for every item of equipment monitored and/or controlled by the BMCS.

B. The operator shall be able to establish on-line, using an interactive procedure, a value for the accumulated operating time at which a suitably worded message shall be output to the operator advising that the reporting limit has been reached for a specific motor. The message shall be output at the designated alarm printer.

C. The operator shall be able to change the accumulated total for any motor to any value.

D. The accumulated operating times shall be updated at least every 15 minutes.

E. The operator shall be able to obtain on demand or on a scheduled basis a report detailing the accumulated operating times.

F. Operating time software shall be used as the basis for equipment operating selection and standby status. Changeover of units based on operating times shall not take place more than an operator-defined period, initially set at once per week.

3.4 NIGHT SETBACK - SETUP

A. Provide a software program that shall:
   1. Start HVAC equipment after normal hours of scheduled operation to maintain building after-hour setpoints, while reducing energy consumption.
   2. Night setback temperatures for heating shall be initially set at 55 degrees F to activate the heating equipment and 60 degrees F to stop the heating equipment. Once activated, the units involved shall operate as specified in the respective sequence of operation. Coordinate the operation of this program with the requirements for terminal unit controls.
   3. Night setup temperatures for cooling shall be initially set at 90 degrees F to activate the cooling equipment and 85 degrees F to stop the cooling equipment. Once activated, the units involved shall operate as specified in the respective sequence of operation. Coordinate the operation of this program with the requirements for terminal unit controls.

B. The operator shall be able to implement this function for all HVAC equipment using an interactive procedure on an individual or group-controlled basis.

C. The operator shall be able to assign minimum run times for each piece of equipment.

D. The operation of this program shall be disabled when the outside air temperature is outside operator defined limits, initially set at 35 degrees F and 95 degrees F.

E. A report shall be available on demand and on a scheduled basis, which provides the following information:
   1. Night setback/setup setpoints and associated equipment.

F. This feature shall only be implemented for equipment in the BMCS software control mode.

G. Setpoints for each associated piece of equipment shall be displayed on the associated system display graphics. Setpoints shall be changeable via the graphical display.

H. The current status of night setback - setup modes shall be indicated on the associated system graphic.

3.5 OPTIMIZED SCHEDULING

A. Provide an adaptive software program that shall:
   1. Start HVAC equipment at the latest possible time while ensuring that space in the building reaches setpoint conditions by the time occupancy commences.
   2. Stop HVAC equipment at the earliest possible time while ensuring that space in the building shall still be within the setpoint deadband at the scheduled end of occupancy.

B. The operator shall be able to implement this function for each group of terminal units and other HVAC equipment using an interactive procedure. A group of terminal units shall comprise all the terminal units on the same floor of the tower served by the same air handling unit. The operator shall be able to assign start of occupancy and end of occupancy times for each day of the week and for holidays. A separate Monday schedule should be provided for earlier start times.

C. This program shall base the determined equipment start and stop times on monitored data such as space temperatures within the area served by the equipment and ambient conditions. If the BMCS subcontractor requires information other than that provided by the monitoring detailed in the Field Termination Schedules, then the necessary additional instrumentation shall be provided within the base bid price.

D. The operator shall be able to assign limits to the start and stop times. Initially these limits shall be set as follows:
   1. BMCS determined start times shall not be more than three hours before the scheduled occupancy.
   2. BMCS determined stop times shall not be more than one hour before the scheduled end of occupancy.

E. A report shall be available on demand and on a scheduled basis, which provides the following information:
   1. Occupancy schedules.
   2. Time of last equipment start and space conditions at scheduled occupancy time.
   3. Time of last equipment stop and space conditions at scheduled end of occupancy time.

F. This feature shall only be implemented for equipment in the BMCS software control mode.

3.6 HEATING WATER SYSTEM

A. System Off - When the system is off:
   1. The boilers shall be disabled.
   2. The heating water pumps shall be off.
   3. Heat exchanger valves shall be closed.

B. Initiation of System Start-Up - The system shall be started:
   1. Manually initiated by operator through BMCS.
   2. Automatically by the BMCS base on a time schedule or whenever there is a requirement for heating.

C. System Operation - After system start-up has been initiated the following shall occur:
   1. Sequential Boiler Control:
      a. the BAS shall enabled and disable the each boiler. the first boiler on shall be the first boiler off on a rotating sequence to allow for even wear.
      b. the first boiler is in alarm, the second shall shall be enabled.
      c. the Boiler shall sequence the firing of the stages in each boiler.
      d. Pumps 1 and 2 shall be hardwired to its respective boiler such that the pump starts when the boiler is enabled.
      e. Pumps 3 and 4 shall provide circulation to hot water heating system.
      f. Pump 5 shall provide circulation to domestic hot water system heat exchanger with 3-way valve temperature control.
      g. The boiler high limit shall be set at 210 deg F and hardwired to the boiler.
      h. The BAS shall prevent the return temperature from dropping below 140 deg F.
      i. When the primary heating loop is in manual mode, the boilers shall operate to maintain a primerary supply temperature equal to 200f minus the outdoor air temperature. However, the primary hot water supply temperature shall never drop below 160 deg F.
      j. When the primary heating loop is in automatic mode, the primary hot water supply temperature adjusted to allow accurate supply air temperature control, domestic hot water temperature control, and radiant loop lfow, while preventing valve hunting.
      k. The primary heating loop supply temperature reset schedule shall be overriden by a demand for higher temperatures from the domest hot water system, the radiation secondary loops, or the domestic hot wter secondary loop.
   2. Fire mode:
      a. The boiler and hot water pumps shall stop.
      b. Shall resume after a manual system reset.

D. System Shutdown - Shall be initiated as follows:
   1. Manually initiated by operator through BMCS.
   2. Automatically by the BMCS base on a time schedule or whenever there is not a requirement for heating.

E. System Setpoints - The setpoints shall be operator changeable and initially set as follows:
   1. Heating water supply temperature setpoint shall be between 160 and 200 degrees F.
   2. The high/low temperature alarm setpoint shall be set initially at 10 degrees F above/below the temperature setpoint.

F. Alarms - The BMCS shall generate an alarm for the following conditions:
   1. Boiler or pump failure.
   2. High/low heating water supply temperature.

G. Failure Positions - The following shall occur upon component failure or loss of power:
   1. Pumps shall remain in the last commanded state.
   2. Boilers shall remain in the last commanded state.

H. Points List:
   1. Analog Inputs:
      a. Primary HW Supply Temperature.
      b. Primary HW Return Temperature.
      c. Second HW Supply Temperature.
      d. Second HW Return Temperature.
      e. Domestic HW Supply Temperature.
      f. Domestic HW Return Temperature.
      g. Outdoor Air Temperature.
   2. Digital Inputs:
      a. Ejector Pump Alarm.
      b. Sump Pump Alarm.
      c. Pump 1 Status.
      d. Pump 2 Status.
      e. Pump 3 Status.
      f. Pump 4 Status.
      g. Pump 5 Status.
      h. Exhaust Fan 1 Status.
      i. Boiler 1 Alarm.
      j. Boiler 2 Alarm.
   3. Analog Outputs:
      a. Primary Hot Water Valve.
      b. Domestic Hot Water Valve.
   4. Digital Outputs:
      a. Pump 1 Start/Stop.
      b. Pump 2 Start/Stop.
      c. Pump 3 Start/Stop.
      d. Pump 4 Start/Stop.
      e. Pump 5 Start/Stop.
      f. Boiler 1 Start/Stop.
      g. Boiler 2 Start/Stop.
      h. Exhaust Fan Start/Stop.

3.7 AHU-2 SELF-CONTAINTED DATA AIRE UNIT

A. The unit shall be enabled/disabled by the BAS based on the occupied/unoccupied schedule.

B. The BAS shall monitor unit alarm and room temperature.

C. Fresh air intake damper shall open when AHU-2 is running.

D. The isolation valve shall remain open during heating season and close during cooling season.

E. Points List:
1. Analog Inputs:
a. VAV-18 Space Humidity.
b. AHU-2 Zone Temperature.
2. Digital Inputs:
a. AHU-2 Alarm.
b. Fire Alarm Status.
3. Digital Outputs:
a. AHU-2 Enable/Disable.
b. Fresh air intake damper.
c. Iso valve s
d. Iso valves 3
e. Iso valves 4

3.8 RTU-1

A. Packaged RTU by McQuay.

3.9 RTU-2

A. Packaged by Aaon.

3.10 AHU-3/4, FIRING RANGE CONTROLS

A. AHU-3/4 may be enabled/disabled by the wall mounted switch or by the BAS based upon a call for heating during occupied hours.

B. The pressurization system, provided by Paragon Controls, shall modulate the dampers and contorl the fan speed accrding to the paragon Controls sequence.

C. Once the system has been enabled, the BAS shall enable the fans.

D. The BAs shall monitor the status on all fans.

E. On a call for heating, the BAS shall enable the system if it is not already running.

F. The BAS shall next start the freeze pump, P-7, and shall modulate the hot water valve, HWV3, to maintain discharge air temperature setpoint.

G. The BAS shall monitor for a low limit alarm, supply smoke detector alarm, or pressurization system alarm.

H. In the event of an alarm, the fans shall stop and the hot water coil valve shall go to full flow. The alarm shall be noted on the frent end computer.

I. The BAS shall also monitor the Fireing Rang Room for room temperature, pressure differential, and all filter conditions.

J. Points list:
1. Analog inputs:
a. Zone Temperature.
b. Mixed Air Temperature.
c. Discharge Air Temperature.
d. Space Static Pressure.
2. Digital Inputs:
a. Low Limit Status.
b. Pump 7 Status.
c. Supply Fan Status.
d. Recirc Fan 1 Status.

e. Recirc Fan 2 Status.
f. Exhaust Fan Status.
g. Pre-Filter - AHU-3.
h. Secondary Filter - AHU-3.
i. HEPA Filter - AHU-3.
j. Pre-Filter - AHU-4.
k. Secondary Filter - AHU-4.
l. HEPA Filter - AHU-4.

3. Digital Outputs:
   a. Pump 7 Start/Stop.
   b. Supply Fan Start/Stop.
   c. Recirc Fan 1 Start/Stop.
   d. Recirc Fan 2 Start/Stop.
   e. Exhaust Fan Start/Stop.

3.11 EXHAUST FANS

A. System Description: Exhaust Fan 1 (EF-1)
   1. Fan shall be started and stopped by the BAS based on occupied/unoccupied schedule.
      a. Fire mode:
         1) The exhaust fan shall be off.
         2) Shall resume normal operation after manual reset.

B. System Description: Exhaust Fan 2 through 6 (EF-2-6)
   1. Exhaust fans 2 through 6 shall be started and stopped by the BAS based upon the occupied/unoccupied schedule.
   2. The status for each fan shall be monitored by the BAS.
   3. Fire Mode:
      a. The exhaust fan shall be off.
      b. Shall resume normal operation after manual reset.

C. System Description: Garage Exhaust fans 1,2, and 3. (GF-1,2, and 3)
   1. The BAS shall monitor the CO level in each of the garage stalls.
   2. When the CO level reaches or exceeds 50 PPM for 8 hours continuously, or the CO level reaches or exceeds 400 PPM for 12 minutes continuously, the garage exhuast fan shall start.
   3. The garage exhaust fan shall be on to maintain the CO below the standard level (adj.).
   4. If the CO level is still above 400 PPM after running the exhuast fan for three minutes, an alarm shall sound.
   5. The status for each fan shall be monitored by the BAS.
   6. The isolation valves shall be normally open during heating season and closed during cooling season.
   7.

D. Alarms - the BMCS shall generate an alarm for the following:
   1. Fan failure.

E. Field Termination Schedule:
   1. Digital input:
      a. EF-2 status.
      b. EF-3 status.
      c. EF-4 status.
      d. EF-5 Status.
      e. EF-6 Status.

f. GF-1 Status.
g. GF-2 Status.
h. GF-3 Status.

2. Digital output:
   a. EF-2 Start/Stop.
   b. EF-3 Start/Stop.
   c. EF-4 Start/Stop.
   d. EF-5 Start/Stop.
   e. EF-6 Start/Stop.
   f. GF-1 Start/Stop.
   g. GF-2 Start/Stop.
   h. GF-3 Start/Stop.
   i. Iso valve 1
   j. Iso valve 2

3.12 UNIT HEATER CONTROL

A. The unit heaters and cabinet unit heaters shall be locally controlled by a wall mounted thermostat. When the temperature drops below the setpoint (adj.), the heaters shall start.

3.13 EJECTOR AND SUMP PUMP

A. These pumps shall be controlled by local controllers. The BAS shall only monitor pumps for high limit alarm.

3.14 ENERGY MANAGEMENT STRATEGIES

A. Critical zone reset: AHU Duct Static Pressure:
   1. Simple strategy - Vary the duct static pressure based on the demand in the VAV system.
   2. Detailed explanation - Upon start up the duct static pressure will be 1.0 “wc (adj.).
      a. When a terminal unit damper position is 95% (adj.) or greater, the duct static pressure will be increased by 0.1 “ wc (adj.) every 15 min. (adj.) until terminal units are below 95% or the maximum static pressure set point of 2.0 “wc (adj.) is reached.
      b. If no boxes are above 65% (adj.) the duct static pressure setpoint will decreased by 0.1 “ wc (adj.) every 15 min or until the minimum static pressure set point of 0.8 “wc (adj.) is reached.
   3. Points List:
      a. Analog inputs
         1) AHU supply static pressure
      b. Set points
         1) Start-up static pressure set point 1.0” wc (adj.).
         2) Minimum static pressure set point 0.8” wc (adj.).
         3) Maximum static pressure set point 2.0” wc (adj.).
         4) Static pressure increment set point 0.1” wc (adj.).
         5) Reset time increment set point 15 minutes (adj.).
      c. Calculated points
         1) Active static pressure set point
         2) Maximum vav position
         3) Minimum vav position
         4) Time until next reset.

B. Critical zone reset: AHU Discharge air setpoint reset:
   1. Simple strategy - Vary the discharge air setpoint based on VAV demand.

2. Detailed explanation - Upon start up the supply set point will be 57 deg (adj.).
   a. When a terminal unit damper position is 95% (adj.) or greater, the supply air temperature set point will be decreased by 0.5 deg(adj.) every 15 min. (adj.) until terminal units are below 95% or the minimum supply set point of 53 deg (adj.) is reached.
   b. If no boxes are above 65% (adj.) the supply setpoint will decreased by 0.5 deg (adj.) every 15 min or until the maximum supply set point of 62 deg (adj.) is reached.
   c. The maximum set point is subject to environment and may need to be lower with respect to humidity. An override set point based on return humidity is an option.
3. Points List:
   a. Analog inputs
      1) AHU supply temperature
   b. Set points
      1) Start-up supply temperature set point 57 deg (adj.).
      2) Minimum supply temperature set point 53 deg (adj.).
      3) Maximum supply temperature set point 62 deg (adj.).
      4) Supply temperature increment set point 0.5 deg (adj.).
      5) Reset time increment set point 15 minutes (adj.).
   c. Calculated points
      1) Active supply air temperature set point
      2) Maximum vav position
      3) Minimum vav position
      4) Average vav position
      5) Maximum space temperature deviation
      6) Maximum space temperature deviation VAV tag
      7) Maximum VAV tag (VAV-1, example)
      8) Minimum VAV tag
      9) Time until next reset.

END OF SECTION

SECTION 23 0923

DIRECT-DIGITAL CONTROL SYSTEM FOR HVAC

PART 1 GENERAL

1.1 SECTION INCLUDES

A. Control System Interfaces

B. System description.

C. Operator interface.

D. Controllers.

E. Power supplies and line filtering.

F. System software.

G. Controller software.

H. HVAC control programs.

1.2 REFERENCE STANDARDS

A. ASHRAE Std 135 - BACnet - A Data Communication Protocol for Building Automation and Control Networks; 2012.

B. NFPA 70 - National Electrical Code; Most Recent Edition Adopted by Authority Having Jurisdiction, Including All Applicable Amendments and Supplements.

C. UL (DIR) - Online Certifications Directory; current listings at database.ul.com.

1.3 ADMINISTRATIVE REQUIREMENTS

A. Preinstallation Meeting: Conduct a preinstallation meeting one week prior to the start of the work of this section; require attendance by all affected installers.

1.4 DEFINITIONS

A. BMCS: The complete building management and direct-digital control system described in this specification section.

B. Provide: Furnish, install, commission, test, and warrant.

C. Furnish: Purchase and deliver to the appropriate installing Contractor, complete with every appurtenance, document, commission, and warranty.

1.5 CONTROL SYSTEM INTERFACES

A. The BMCS contractor shall coordinate with all contractors and the associated manufacturers responsible for the system and shall determine the points that are to be mapped from the BMCS to the third party system and the points that are to be mapped from the third party system to the BMCS.

B. Where it is possible to map points from one system to the other that are not identified in these Contract Documents, the BMCS contractor shall advise the Owner, Consultant, and Engineer; and they shall determine whether additional points are to be mapped from one system to the other.

C. Provide mapping, alarm configuration, and graphic creation of, at minimum, twice the listed point quantities within these documents as directed by the Owner.

D. The BMCS contractor shall provide details of the method of integration and the information to be transferred between the systems as part of the shop drawing package.

E. Equipment manufacturer/contractor shall provide communication port specifically for the interfacing of the system to the BMCS.

F. The BMCS contractor shall be responsible for all cable, conduit, and suitable cable connectors to the port on the system and the BMCS and other components as necessary for the software communications link from the system to the BMCS.

G. The fact that the points are mapped from systems to the BMCS shall be transparent to the operator. It shall not be necessary for the BMCS operator to know that the points are mapped from another system in order to implement such functions as adding and deleting a mapped point on a report/graphic, adjusting schedules and alarm limits associated with a mapped point, including a mapped point in a sequence of operations, etc.

H. If the BMCS contractor cannot document that the exact same interface has been performed between the BMCS and the systems, then the interfaces shall be tested prior to installations at an offsite location. If the test is successful, the BMCS contractor shall advise the Owner and Engineer and a time shall be established that is acceptable to the Owner and Engineer when the interface can be demonstrated.

I. The BMCS hardware shall not be installed at the project location until all system interfaces to the BMCS have been successfully demonstrated or documented.

J. If demonstration testing is required, the BMCS contractor shall be responsible for providing all equipment necessary to perform the demonstration and for ensuring the presence at the testing of suitably skilled personnel from system manufacturer/contractor. The testing of the interface between the two systems shall verify, at minimum, that:
   1. All data points mapped from the system to the BMCS are displayed correctly on the BMCS monitor and have the same functionality as points directly monitored/controlled by the BMCS.
   2. All data points mapped from the BMCS to the system are displayed correctly on the systems monitor.
   3. All mapped points are identical with regard to value, engineering units, and significant digits on both systems.
   4. All points mapped from the system to the BMCS meet all of the specifications detailed in the contract documents for points directly monitored/controlled by the BMCS.
   5. The communications watchdog is functioning correctly.
   6. Communications speed between the two systems is satisfactory.
   7. Both systems restart and communications between the two systems resume following a power failure without operator intervention.

K. Site tests similar to those detailed above shall be repeated as part of the final acceptance testing.

L. Documentation regarding the BMCS software interfaces shall be provided in sufficient detail as to enable a person reasonably skilled in the writing of real time software applications to add/delete points mapped from one system to the other. At minimum, the documentation shall include a detailed description of each protocol used and the model, version, and firmware details of any protocol converter (gateway) that is used.

M. A watchdog procedure must be implemented by the BMCS contractor that enables the identification of the point of failure, i.e., where in the communications chain between the two systems did the failure occur. The watchdog function must operate at a frequency that detects a failure within 60 seconds.

1.6 SUBMITTALS

A. Specification Compliance Review.

B. Shop drawings and product data shall be in original searchable PDF format.

C. Product data shall be presented according to an included table of contents.

D. Product Data: Provide data for each system component and software module.

E. Shop Drawings:
1. Indicate trunk cable schematic showing programmable control unit locations, and trunk data conductors.
2. List connected data points, including connected control unit and input device.
3. All components and controllers inclusive or 3rd party shall have a points list for each. Deviation from contract documents shall be reported to design team with alternates and/or a reason for deviation.
4. Control drawings shall have a completed system architecture. Controllers and components inclusive to the control system as well as 3rd party controllers and components to be integrated and/or communicated with.
5. Indicate system graphics indicating monitored systems, data (connected and calculated) point addresses, and operator notations. Provide demonstration diskette containing graphics.
6. Show system configuration with peripheral devices, batteries, power supplies, diagrams, modems, and interconnections.
7. Indicate description and sequence of operation of operating, user, and application software.

F. Manufacturer's Instructions: Indicate manufacturer's installation instructions for all manufactured components.

G. Project Record Documents: Record actual locations of control components, including control units, thermostats, and sensors.
1. Revise shop drawings to reflect actual installation and operating sequences.
2. Include submittals data in final "Record Documents" form.
3. All wiring pathways, connections, junctions, transformers, etc. shall be as-built of a floor plan drawings and included with record drawings.

H. Operation and Maintenance Data:
1. Include interconnection wiring diagrams complete field installed systems with identified and numbered, system components and devices.
2. Include keyboard illustrations and step-by-step procedures indexed for each operator function.
3. Include inspection period, cleaning methods, cleaning materials recommended, and calibration tolerances.

I. Warranty: Submit manufacturer's warranty and ensure forms have been filled out in Owner s name and registered with manufacturer.

1.7 QUALITY ASSURANCE

A. Perform work in accordance with NFPA 70.

B. Manufacturer Qualifications: Company specializing in manufacturing products specified in this section with minimum three years of documented experience.

C. Installer Qualifications: Company specializing in performing work of the type specified and with minimum three years of documented experience .

D. Products Requiring Electrical Connection: Listed and classified by UL (DIR) as suitable for purpose specified and indicated.

E. Comply with ASHRAE 135 for DDC system control components. BTL listed.

1.8 WARRANTY

A. Correct defective Work within a 1 month period after Substantial Completion.

B. Provide One year manufacturer's warranty for field programmable micro-processor based units.

1.9 CONTRACTOR QUALIFICATIONS

A. The BMCS contractor shall:
1. Have a local staff in the area of trained personnel capable of giving instructions and providing routine and emergency maintenance on the BMCS, all components and software/firmware, and all other elements of the BMCS.
2. Have a proven record of experience in the supply and installation of equivalent systems over a minimum period of five years. Document at least three and no more than six projects of equal or greater size and complexity.
3. Have been a factory-certified representative for the BMCS manufacturer for a minimum of three years for design, installation, and maintenance of the proposed systems.
4. Have comprehensive local service and support facilities for the total BMCS as provided.
5. Maintain local, or have approved local contracted access to, supplies of essential expendable parts.
6. All installed equipment, controllers, software, configuration software, shall be licensed directly to the owner with alternate source for sales and service stated in warranty statement.

1.10 EXTRA MATERIALS

A. See Section 01 6000 - Product Requirements, for additional provisions.

1.11 PROTECTION OF SOFTWARE RIGHTS

A. Prior to delivery of software, the Owner and the party providing the software will enter into a software license agreement with provisions for the following:
1. Software shall be licensed directly to the owner.
2. Software and hardware firmware upgrades shall be provided at no additonal cost to the owner for a period of one year.
3. Configuration, programming, and service tools shall be provided to the owner.
4. Prohibiting transfer to a third party.
5.

PART 2 PRODUCTS

2.1 MANUFACTURERS

A. Alerton: www.alterton.com. - by Syserco.

2.2 SYSTEM DESCRIPTION

A. Automatic temperature control field monitoring and control system using field programmable micro-processor based units .

B. Base system on distributed system of fully intelligent, stand-alone controllers, operating in a multi-tasking, multi-user environment on token passing network, with central and remote hardware, software, and interconnecting wire and conduit.

C. Include computer software and hardware, operator input/output devices, control units, local area networks (LAN), sensors, control devices, actuators.

D. Controls for variable air volume terminals, radiation, reheat coils, unit heaters, fan coils, and the like when directly connected to the control units. Individual terminal unit control is specified in Section 23 0913.

E. Provide control systems consisting of thermostats, control valves, dampers and operators, indicating devices, interface equipment and other apparatus and accessories required to operate mechanical systems, and to perform functions specified.

F. Include installation and calibration, supervision, adjustments, and fine tuning necessary for complete and fully operational system.

G. BMCS Contractor shall be responsible for all electrical work associated with the BMCS.
   1. Perform all wiring in accordance with all local and national codes.
   2. Install all line voltage wiring, concealed or exposed, in conduit in accordance with the division 26 specifications, NEC and local building code.
   3. Surge transient protection shall be incorporated in design of system to protect electrical components in all DDC Controllers and operator's workstations.
   4. All low voltage electrical control wiring throughout the building whether in exposed areas shall be run in conduit in accordance with the division 26 specifications, local building code and the NEC.
   5. Provide all miscellaneous field device mounting and interconnecting wiring for all mechanical systems including fuel oil system, emergency generators, chillers, water treatment, AC units, condensing units, expansion tanks, VFD, unit heaters, filtration systems, terminal units, fan coil units, electric heater's, chiller control system.
   6. All systems requiring interlock wiring shall be hardwired interlocked and shall not rely on the BMCS to operate (e.g. emergency generator to fuel oil pump interlock, emergency generator damper interlock, etc.) Interlock wiring shall be run in separate conduits from BMCS associated wiring.

2.3 OPERATOR FUNCTIONS - WEB-BASED BMCS

A. Operators shall have access to specific functions of the BMCS via a standard web browser interface, subject to password access assigned by the Owner. The web-based displays shall be HTML 5 based. The web-based access shall present information to the operators and tenants to accomplish the following:
   1. Tenants with low-level passwords shall be able to:
      a. Enter a start time, duration, and designate lighting only or HVAC/Lighting to start for after-hour service. Provide a report to show current charges for these after-hour services for each tenant on a zone-by-zone basis.
      b. Zone Setpoint Changes: These shall be constrained within an operator-determined value which shall be set initially at + and - 2 degrees F.
   2. Operators with the appropriate level and password shall be able to perform all specified functions specified in these documents.

B. All operator entries shall be coordinated with the BMCS to ensure seamless operations and tracking of all changes to history and archive databases.

C. System must support Android and Iphone access with support for mobile and tablet applications.

D. Operator must have access to all editing software from any browser. Available software must be imbedded on controller to support editing and sub-controller access if applicable.

E. Provide all necessary web page creations, user name and passwords, and configurations to fully implement this feature for 200 users.

F. BMCS Security

1. General Security
    a. All internet facing user interface allowing remote access shall be placed behind a firewall or VPN.
    b. Consult with local IT staff for preferred method and verification of IT security policies.
    c. Contractor shall be responsible for a securable interface.
    d. User interface , if not directly protected by owner IT infrastructure security policies shall update security definitions on a regular basis. No less than once per week.
    e. Access from remote source shall be secured by HTTPS Hyper Text Transfer Protocol over SSL (Secure Socket Layer).
        1) An SSL Certificate shall be provided at no additional cost to the owner.
    f. Default credentials that are used to set up software shall not be available after installation.
    g. Disable FTP, Telnet, and any other services that may deem the system “unsecure”.
    h. Disable services that will not be used.
    i. Software updates shall be performed regularly.
    j. Contractor / vendor shall hold liability for all “third-party” software including graphics builders, software for sub-controllers, tech-support access, contractor admin / billing.
    k. All external memory required or used on-site shall be verified by local IT staff to be safe before being used on owner network.
    l. All laptops and workstations being added to the owners network must be approved and cleared before being added to the network.
    m. IP addresses shall be approved and provided by local IT staff.
2. Installation Security
    a. Install supervisory controller(s) in locked area with restricted access.
3. User Security
    a. Passwords:
        1) “Strong Password” functionality shall be available.
        2) Passwords shall expire after 90 days.
        3) A 15 day warning period of expiration shall be used.
        4) User password reset shall be available.
        5) Password history of 5 shall be enabled.
    b. Account lockout feature shall be used with a 30 second lockout period.
    c. 10 Maximum logins before lockout with a 5 minute lockout window.
    d. All lockout features shall be approved by local IT staff.
    e. Use a different account for each user.
    f. Use unique service type accounts(admin, user, view only, etc).

g. Install read-only remote accessible account for design team and commissioning authority.

2.4 CONTROLLERS AND PANELS

A. Primary DDC panels as follows:

1. It is acceptable to wire the following systems into any of the Primary DDC panels:
   a. Miscellaneous alarm monitoring (i.e. ATS, leak, temperature, light …etc.)
   b. Miscellaneous equipment (i.e. Unit Heater, Domestic Water Heater, Standalone Dampers …etc.)
2. Motors in motor control centers shall be controlled from the DDC controller associated with HVAC system. It shall not be acceptable to control all motors in a MCC from one DDC controller dedicated to the MCC. The intent of this specification is that the loss of any one DDC controller shall not affect the operation of other HVAC systems, only for the points connected to the DDC controller.

B. Building Controllers

1. General:
   a. All controllers must be of open protocol.
   b. Controls shall be BTL listed.
   c. Manage global strategies by one or more, independent, standalone, microprocessor based controllers.
   d. Provide sufficient memory to support controller's operating system, database, and programming requirements.
   e. Share data between networked controllers.
   f. Controller operating system manages input and output communication signals allowing distributed controllers to share real and virtual object information and allowing for central monitoring and alarms.
   g. Utilize real-time clock for scheduling.
   h. Continuously check processor status and memory circuits for abnormal operation.
   i. Controller to assume predetermined failure mode and generate alarm notification upon detection of abnormal operation.
   j. Communication with other network devices to be based on assigned protocol.
   k. Monitor, control, or address data points. Mix shall include analog inputs, analog outputs, pulse inputs, pulse outputs and discrete inputs/outputs, as required.
   l. Provide control unit's with minimum 20 percent spare capacity on additional controllers.
   m. Point Scanning: Set scan or execution speed of each point to operator selected time from 1 to 250 seconds.
   n. Upload/Download Capability: Download from or upload to operator station. Upload/Download time for entire control unit database maximum 10 seconds on hard wired LAN, or 60 seconds over voice grade phone lines.
   o. Controller perform in stand-alone mode:
      1) Start/stop.
      2) Duty cycling.
      3) Automatic Temperature Control.
      4) Demand control via a sliding window, predictive algorithm.
      5) Event initiated control.
      6) Calculated point.
      7) Scanning and alarm processing.

8) Full direct digital control.
9) Trend logging.
10) Global communications.
11) Maintenance scheduling.

p. Controller Input/Output Capability:
1) Discrete/digital input (contact status).
2) Discrete/digital output.
3) Analog input.
4) Analog output.
5) Pulse input (5 pulses/second).
6) Pulse output (0-655 seconds in duration with 0.01 second resolution).

q. Controller Test Mode Operation: Place input/output points in test mode to allow testing and developing of control algorithms on line without disrupting field hardware and controlled environment. In test mode:
1) Inhibit scanning and calculation of input points. Issue manual control to input points (set analog or digital input point to operator determined test value) from work station.
2) Control output points but change only data base state or value; leave external field hardware unchanged.
3) Enable control actions on output points but change only data base state or value.

r. Controller local display and adjustment panel: Portable control unit, containing digital display, and numerical keyboard. Display and adjust:
1) Input/output point information and status.
2) Controller set points.
3) Controller tuning constants.
4) Program execution times.
5) High and low limit values.
6) Limit differential.
7) Set/display date and time.
8) Control outputs connected to the network.
9) Automatic control outputs.
10) Perform control unit diagnostic testing.
11) Points in "Test" mode.

2. Communication:
a. Controller to reside on a BACnet network using ISO 8802-3 (ETHERNET) Data Link/Physical layer protocol.
b. Perform routing when connected to a network of custom application and application specific controllers.
c. Provide service communication port for connection to a portable operator's terminal or hand held device with compatible protocol.

3. Anticipated Environmental Ambient Conditions:
a. Outdoors and/or in Wet Ambient Conditions:
1) Mount within waterproof enclosures.
2) Rated for operation at 40 to 150 degrees F (4 to 65 degrees C).
b. Conditioned Space:
1) Mount within dustproof enclosures.
2) Rated for operation at 32 to 120 degrees F (0 to 50 degrees C).

4. Provisions for Serviceability:
a. Diagnostic LEDs for power, communication, and processor.
b. Make all wiring connections to field removable, modular terminal strips, or to a termination card connected by a ribbon cable.

5. Memory: In the event of a power loss, maintain all BIOS and programming information for a minimum of 72 hours.
6. Power and Noise Immunity:
   a. Maintain operation at 90 to 110 percent of nominal voltage rating.
   b. Perform orderly shutdown below 80 percent of nominal voltage.
   c. Operation protected against electrical noise of 5 to 120 Hz and from keyed radios up to 5 W. at 3 feet (1 m).

C. Custom Application Controllers
1. General:
   a. Provide sufficient memory to support controller's operating system, database, and programming requirements.
   b. Share data between networked, microprocessor based controllers.
   c. Controller operating system manages input and output communication signals allowing distributed controllers to share real and virtual object information and allowing for central monitoring and alarms.
   d. Utilize real-time clock for scheduling.
   e. Continuously check processor status and memory circuits for abnormal operation.
   f. Controller to assume predetermined failure mode and generate alarm notification upon detection of abnormal operation.
   g. Communication with other network devices to be based on assigned protocol.
2. Communication:
   a. Controller to reside on a BACnet network using MS/TP Data Link/Physical layer protocol.
   b. Provide service communication port for connection to a portable operator's terminal or hand held device with compatible protocol.
3. Anticipated Environmental Ambient Conditions:
   a. Outdoors and/or in Wet Ambient Conditions:
      1) Mount within waterproof enclosures.
      2) Rated for operation at 40 to 150 degrees F (4 to 65 degrees C).
   b. Conditioned Space:
      1) Mount within dustproof enclosures.
      2) Rated for operation at 32 to 120 degrees F (0 to 50 degrees C).
4. Provisions for Serviceability:
   a. Diagnostic LED's for power, communication, and processor.
   b. Make all wiring connections to field removable, modular terminal strips, or to a termination card connected by a ribbon cable.
5. Memory: In the event of a power loss, maintain all BIOS and programming information for a minimum of 72 hours.
6. Power and Noise Immunity:
   a. Maintain operation at 90 to 110 percent of nominal voltage rating.
   b. Perform orderly shutdown below 80 percent of nominal voltage.
   c. Operation protected against electrical noise of 5 to 120 Hz and from keyed radios up to 5 W. at 3 feet (1 m).

D. Application Specific Controllers
1. General:
   a. Not fully user programmable, microprocessor based controllers dedicated to control specific equipment.
   b. Customized for operation within the confines of equipment served.
   c. Communication with other network devices to be based on assigned protocol.

2. Communication:
   a. Controller to reside on a BACnet network using MS/TP Data Link/Physical layer protocol.
   b. Provide service communication port for connection to a portable operator's terminal or hand held device with compatible protocol.
3. Anticipated Environmental Ambient Conditions:
   a. Outdoors and/or in Wet Ambient Conditions:
      1) Mount within waterproof enclosures.
      2) Rated for operation at 40 to 150 degrees F (4 to 65 degrees C).
   b. Conditioned Space:
      1) Mount within dustproof enclosures.
      2) Rated for operation at 32 to 120 degrees F (0 to 50 degrees C).
4. Provisions for Serviceability:
   a. Diagnostic LEDs for power, communication, and processor.
   b. Make all wiring connections to field removable, modular terminal strips, or to a termination card connected by a ribbon cable.
5. Memory: In the event of a power loss, maintain all BIOS and programming information for a minimum of 72 hours.
6. Power and Noise Immunity:
   a. Maintain operation at 90 to 110 percent of nominal voltage rating.
   b. Perform orderly shutdown below 80 percent of nominal voltage.
   c. Operation protected against electrical noise of 5 to 120 Hz and from keyed radios up to 5 W. at 3 feet (1 m).

E. Input/Output Interface
1. Hardwired inputs and outputs tie into the DDC system through building, custom application, or application specific controllers.
2. All Input/Output Points:
   a. Protect controller from damage resulting from any point short-circuiting or grounding and from voltage up to 24 volts of any duration.
   b. Provide universal type for building and custom application controllers where input or output is software designated as either binary or analog type with appropriate properties.
3. Binary Inputs:
   a. Allow monitoring of On/Off signals from remote devices.
   b. Provide wetting current of 12 mA minimum, compatible with commonly available control devices and protected against the effects of contact bounce and noise.
   c. Sense dry contact closure with power provided only by the controller.
4. Pulse Accumulation Input Objects: Conform to all requirements of binary input objects and accept up to 10 pulses per second.
5. Analog Inputs:
   a. Allow for monitoring of low voltage 0 to 10 VDC, 4 to 20 mA current, or resistance signals (thermistor, RTD).
   b. Compatible with and field configurable to commonly available sensing devices.
6. Binary Outputs:
   a. Used for On/Off operation or a pulsed low-voltage signal for pulse width modulation control.
   b. Outputs provided with three position (On/Off/Auto) override switches.
   c. Status lights for building and custom application controllers to be selectable for normally open or normally closed operation.

7. Analog Outputs:
    a. Monitoring signal provides a 0 to 10 VDC or a 4 to 20 mA output signal for end device control.
    b. Provide status lights and two position (AUTO/MANUAL) switch for building and custom application controllers with manually adjustable potentiometer for manual override on building and custom application controllers.
    c. Drift to not exceed 0.4 percent of range per year.
    d. Adjust range of analog output to match range of end device, valves actuator, VFC, etc.
    e. Program all PID loop control to match range and stroke of end device. For example if a VFC has a minimum speed of 20% output should be configure to start at 20% to eliminate spooling of PID outside actual operating range of end device.
    f. Graphics shall represent actual range of end device. If VFC range is from 20% to 100%, graphical reference should match.
8. Tri State Outputs:
    a. Coordinate two binary outputs to control three point, floating type, electronic actuators without feedback.
    b. Limit the use of three point, floating devices to the following zone and terminal unit control applications:
        1) VAV terminal units.
        2) Duct mounted heating coils.
    c. Control algorithms run the zone actuator to one end of its stroke once every 24 hours for verification of operator tracking.
9. System Object Capacity:
    a. System size to be expandable to twice the number of input output objects required by providing additional controllers, including associated devices and wiring.
    b. Hardware additions or software revisions for the installed operator interfaces are not to be required for future, system expansions.

2.5 END-USER GRAPHICAL INTERFACE (GUI)

A. Graphics to be built entirely in HTML5
    1. No JAVA applets will be utilized to view graphics

B. Customizable graphical user experience and interface layer independent of the underlying BAS to visually monitor real-time and historic data originating from various data-sources.

C. Shall enable the operator with permissions to manage users, user-navigation and application configuration directly from the web interface.

D. Viewer and Designer shall be web-based and accessible from any standard web-browser on Mac and PC, and as a native mobile application on Apple and Android devices.

E. Viewer shall be available as a download on authorized mobile market places:
    1. Apple AppStore
    2. Google Play
    3. Android

F. Shall be able to be installed locally (On-site) or hosted in a cloud (On-Demand)

G. Shall have an embedded feedback and support mechanism to facilitate efficient commissioning and start-up.

H. Enable the operator to design 100% custom user-interfaces to perfectly depict physical and virtual structures, equipment, devices and corporate visual design standards.

I. Include a single and unified web-based designer application to enable the operator to create and design dashboards and visual interfaces. The designer shall expose macro visual components such as charting widgets and gauges as well as micro visual components such as square, circle, path, etc… drawing tools.
   1. All dashboards and interfaces created in the web-based designer application shall be stored in an un-compressed human-readable format such as XML to facilitate integration into enterprise CMS and search providers.
   2. Using the designer the operator shall have the ability to create custom logic for live/historic data-transformation and representation in the visual operator interface.
   3. Multiple operators shall be able to view, design and configure the web-based GUI simultaneously. No 3rd party GUI designer software shall be required to be installed on the operators' PC other than a standard web-browser and Adobe Flash-Player .

J. The web-based GUI Application shall have the following operator adjustable functionality:
   1. Preconfigured templates for common visual themes and designs
   2. The operator shall be able to use percentage based Widget dimensions and layout constraints to achieve automatic content scaling and resolution independence in order to seamlessly share the "interface" to any device, display resolution or platform.
   3. All configuration parameters of widgets shall have the ability to have data linked to them to allow the ability to change the visual state based on the live data feed.
   4. Any interface and widget shall be able to be relativized to its parent container. Multiple-Level relativization shall be supported to enable relativization of multiple widgets, equipment schematics, floorplans, etc… in a single unified interface.
   5. Interface widgets shall have options for advanced color effects and filters such as Image Color, Tint, Hue, Contrast, Saturation, Brightness, Transparency, Blend Mode, Blur, Bevel, Drop Shadow and Glow
      a. Widgets shall support transformations such as X, Y, Z rotation and omni-directional skewing.
      b. User defined and created custom components shall be allowed to be saved into the native "Widget Chooser".
      c. Custom widget snapping-points shall be user-definable to allow easy interface creation.
      d. Logic Block Widgets shall be provided to allow the operator to design custom data transformation and conversion sequences such as Math Expression Block, If Block, Timer Block, etc…
   6. The Operator shall be able to create personalized interaction by adding behaviors to any widget using a "Record State" function, which allows recording changes to parameters and widget styles and automatically saving the recorded changes as widget behaviors, that are played back upon the execution of the behavior trigger such as a mouse-click.
      a. Standard GUI mouse and mobile gesture behaviors shall include: click, double click, roll over, rollover & out, mouse down, mouse up, click on, click off, swipe, rotate, pinch, spread, two finger tap and scroll
      b. Behaviors shall also allow triggering of GUI specific functions such as: commands to data points, export to image, export to .pdf files, export to .xls, refresh, logout, open another dashboard or open an external web page

7. The following visual widgets shall be included as building blocks for constructing dashboards and interfaces. The GUI shall allow the operator to create new building blocks by combining the base widgets together and saving to the library
   a. Containers such as Absolute Layout, Vertical Layout, Horizontal Layout, Tile Layout, Dockable Layout, Divided Box, DGML Include, View Stack, Tab Navigator, Accordion, Horizontal Coverflow, Vertical Coverflow and Carousel shall be supported to group and automatically layout multiple widgets together.
   b. A robust Charting widget set shall be included with support for multiple axis and data-series for each chart type
      1) Line Chart and Area Chart with operator customizable line and fill styles and data-marker renderers
      2) Pie Chart with operator customizable pie-slice fill styles and callout styles
      3) Column Chart and Bar Chart with operator customizable column / bar “item renderer” that allows to visually design the specific look and style of individual columns and bars.
      4) Radar Chart with support for multiple data-series
      5) Scatter Plot Chart with operator customizable bubble “item renderer” that allows to visually design the specific look and style of individual data-points.
      6) Heat Map with variable thermal density adjustment based on data-point intensity
   c. Customizable Analog and Digital Gauges shall be included
      1) Circular Gauges, Semi-Circular Gauges, Horizontal Gauges, Vertical Gauges with fully customizable color, label, unit, range and theme styles
      2) Customizable Gauge Component to allow the operator to design any type of uniquely styled Gauge
      3) Gauges shall have ability to have multiple pointers to visualize multiple points of data at the same time
   d. Dashboard Design Elements
      1) Shape Drawing tools such as Rectangle, Circle, rounded Rectangle and Bezier Path shall be available to draw custom GUI elements or to create “hot spots” and overlays on Images such as Campus Rendering, Building Rendering or Floor-Plan rendering.
      2) Universal media loader, image loader, frame animator, Video Player, YouTube Loader, Sound Loader, Web Portlet and WebCam components shall be included to allow the operator to load and display 3rd party assets and to interact with them using the GUIs data-binding and behavior functionality
      3) Standard Form Elements such as Button, Text Input, Text Area, Combo Box, Date Range Picker, Color Picker, Slider, etc… shall be provided to allow creation of input forms and end-user adjustable interface parameters such as Date Range Selection for Charting and Set-Point adjustment with Slider.
      4) A dynamic run-time tree widget shall be included that allows for custom adjustment to GUI interface navigation structure via user-defined BQL queries
      5) A QR Code Reader widget shall be provided to allow the end-user to use a mobile device to quickly scan equipment identification codes and automatically open appropriate interface screens.

6) An Interactive geographical Mapping component with customizable geographical markers “Item Renderers” shall be provided to allow visualization of global, national or regional metrics and KPIs. Using marker “Item Renderers” KPIs may be simple Icons, Pie Charts, Tooltips, etc…

8. Dashboard Examples:
   a. Energy Usage Examples:
      1) Utility Electrical
      2) Natural Gas
      3) Steam
      4) Chilled Water
      5) Condenser Water
      6) Geothermal Energy
      7) Photovotaic Power
      8) Solar Water Heating
      9) Wind Generating Power
   b. Domestic Water Usage
      1) Gray Water Usage
      2) Storm Water Usage
   c. Weather Data
   d. HVAC Equipment Operation Status
   e. Lighting Control - Daylighting

2.6 CONTROLLER SOFTWARE

A. All applications reside and operate in the system controllers and editing of all applications occurs at the operator workstation.

B. System Security:
   1. User access secured via user passwords and user names.
   2. Passwords restrict user to the objects, applications, and system functions as assigned by the system manager.
   3. User Log On/Log Off attempts are recorded.
   4. Automatic Log Off occurs following the last keystroke after a user defined delay time.

C. Object or Object Group Scheduling:
   1. Automatically initiate equipment or system commands, based on preselected time schedule for points specified.
   2. Provide program times for each day of week, per point, with one minute resolution.
   3. Automatically generate alarm output for points not responding to command.
   4. Output summary: Listing of programmed function points, associated program times, and respective day of week programmed points by software groups or time of day.
   5. Weekly Schedules Based on Separate, Daily Schedules:
      a. Include start, stop, optimal stop, and night economizer.
      b. 10 events maximum per schedule.
      c. Start/stop times adjustable for each group object.
   6. Exception Schedules:
      a. Based on any day of the year.
      b. Defined up to one year in advance.
      c. Automatically discarded and replaced with standard schedule for that day of the week upon execution.

7. Holiday or Special Schedules:
    a. Capability to define up to 99 schedules.
    b. Repeated annually.
    c. Length of each period is operator defined.

D. Provide standard application for equipment coordination and grouping based on function and location to be used for scheduling and other applications.

E. Alarms:
1. Verify the following with owner: degree of alarming, event log - item is entered into event with no warning or notification, system alarm - entered into event log with local alarm or warning message, no notification, critical alarm - enters event log, alarms at local machines, and a notification is sent, event “delays” - inform secondary recipients if primary does not acknowledge, “round robin” if required by owner, if alarm is not acknowledged by primary, secondary is notified after delay, if secondary does not acknowledge, primary will be notified again, not stopping until acknowledged.
2. Alarm acknowledgment may be accompanied by note by operator to be entered into event log for archive and information sharing with operators.
3. Off normal condition: Cause alarm and appropriate message, including time, system, point descriptor, and alarm condition. Select alarm state/value and which alarms shall cause automatic dial-out.
4. Critical alarm or change-of-state: Display message, stored on disk for review and sort, or print.
5. Display multiple alarms in order of occurrence.
6. Define time delay for equipment start-up or shutdown.
7. Continue to indicate unacknowledged alarms after return to normal.
8. Binary object is set to alarm based on the operator specified state.
9. Analog object to have high/low alarm limits.
10. All alarming is capable of being automatically and manually disabled.
11. Alarm Messages:
    a. Assign alarm messages to system messages including point's alarm condition, point's off-normal condition, totalized point's warning limit, hardware elements advisories.
    b. Operator commands include define, modify, or delete; output summary listing current alarms and assignments; output summary defining assigned points.
12. Alarm Reporting:
    a. Operator determines action to be taken for alarm event.
    b. Alarms to be routed to appropriate workstation.
    c. Reporting Options:
        1) Start Programs.
        2) Print.
        3) Logged.
        4) Custom messaging.
        5) Graphical displays.
        6) Dial out to workstation receivers via system protocol.

F. Maintenance Management: System monitors equipment status and generates maintenance messages based upon user-designated run-time limits.
1. Maintenance scheduling targets with automatic annunciation, scheduling and shutdown.
2. Equipment safety targets.
3. Display of maintenance material and estimated labor.
4. Target point reset, per point.

G. Advisories:
   1. Summary which contains status of points in locked out condition.
   2. Continuous operational or not operational report of interrogation of system hardware and programmable control units for failure.
   3. Report of power failure detection, time and date.
   4. Report of communication failure with operator device, field interface unit, point, programmable control unit.

H. Sequencing: Application software based upon specified sequences of operation in Section 23 0993.

I. PID Control Characteristics:
   1. Direct or reverse action.
   2. Anti-windup.
   3. Calculated, time-varying, analog value, positions an output or stages a series of outputs.
   4. User selectable controlled variable, set-point, and PED gains.

J. Staggered Start Application:
   1. Prevents all controlled equipment from simultaneously restarting after power outage.
   2. Order of equipment startup is user selectable.

K. Energy Calculations:
   1. Accumulated instantaneous power or flow rates are converted to energy use data.
   2. Algorithm calculates a rolling average and allows window of time to be user specified in minute intervals.
   3. Algorithm calculates a fixed window average with a digital input signal from a utility meter defining the start of the window period that in turn synchronizes the fixed-window average with that used by the power company.

L. Anti-Short Cycling:
   1. All binary output objects protected from short-cycling.
   2. Allows minimum on-time and off-time to be selected.

M. On-Off Control with Differential:
   1. Algorithm allows binary output to be cycled based on a controlled variable and set-point.
   2. Algorithm to be direct-acting or reverse-acting incorporating an adjustable differential.

N. Run-Time Totalization:
   1. Totalize run-times for all binary input objects.
   2. Provides operator with capability to assign high run-time alarm.

O. Trend Point:
   1. Output trend logs as line graphs or bar graphs. Output graphic on terminal, with each point for line and bar graphs designated with a unique pattern, vertical scale either actual values or percent of range, and horizontal scale time base. Print trend logs up to 12 columns of one point/column.
   2. Export trends in .csv, .pdf formats.

P. Interlocking:
   1. Permit events to occur, based on changing condition of one or more associated master points.

2. Binary contact, high/low limit of analog point or computed point shall be capable of being utilized as master. Same master may monitor or command multiple slaves.

Q. Input/Output Capability From Operator Work Station:
1. Request display of current values or status in tabular or graphic format.
2. Command selected equipment to specified state.
3. Initiate logs and reports.
4. Change analog limits.
5. Add, delete, or change points within each control unit or application routine.
6. Change point input/output descriptors, status, alarm descriptors, and engineering unit descriptors.
7. Add new control units to system.
8. Modify and set up maintenance scheduling parameters.
9. Develop, modify, delete or display full range of color graphic displays.
10. Automatically archive select data even when running third party software.
11. Provide capability to sort and extract data from archived files and to generate custom reports.
12. Support two printer operations.
    a. Alarm printer: Print alarms, operator acknowledgements, action messages, system alarms, operator sign-on and sign-off.
    b. Data printer: Print reports, page prints, and data base prints.
13. Select daily, weekly or monthly as scheduled frequency to synchronize time and date in digital control units. Accommodate daylight savings time adjustments.
14. Print selected control unit data base.

R. Data Base Creation and Support: Changes shall utilize standard procedures. Control unit shall automatically check work station data base files upon connection and verify data base match. Minimum capability shall include:
1. Add and delete points.
2. Modify any point parameter.
3. Change, add, or delete English language descriptors.
4. Add, modify, or delete alarm limits.
5. Add, modify, or delete points in start/stop programs, trend logs, etc.
6. Create custom relationship between points.
7. Create or modify DDC loops and parameters.
8. Create or modify override parameters.
9. Add, modify, and delete any applications program.
10. Add, delete, develop, or modify dynamic color graphic displays.

S. Operator Station:
1. Accept data from LAN as needed without scanning entire network for updated point data.
2. Interrogate LAN for updated point data when requested.
3. Allow operator command of devices Without the purchase of additional software from any pc via web interface..
4. Allow operator to place specific control units in or out of service.
5. Allow parameter editing of control units.
6. Store duplicate data base for every control unit and allow down loading while system is on line.
7. Control or modify specific programs.
8. Develop, store and modify dynamic color graphics.
9. Provide data archiving of assigned points and support overlay graphing of this data utilizing up to four (4) variables.

T. Event Processing: Automatically initiate commands, user defined messages, take specific control actions or change control strategy and application programs resulting from event condition. Event condition may be value crossing operator defined limit, change-of-state, specified state, or alarm occurrence or return to normal.

U. Automatic Restart: Automatically restart field equipment on restoration of power. Provide time delay between individual equipment restart and time of day start/stop.

V. Messages:
1. Automatically display or print user-defined message subsequent to occurrence of selected events.
2. Compose, change, or delete any message.
3. Display or log any message at any time.
4. Assign any message to any event.

W. Reports:
1. Manually requested with time and date.
2. Long term data archiving to hard disk.
3. Automatic directives to download to transportable media such as floppy diskettes for storage.
4. Data selection methods to include data base search and manipulation.
5. Data extraction with mathematical manipulation.
6. Data reports shall allow development of XY curve plotting, tabular reports (both statistical and summary), and multi-point timed based plots with not less than four (4) variables displayed.
7. Generating reports either normally at operator direction, or automatically under work station direction.
8. Reports may either manually displayed or printed, or may be printed automatically on daily, weekly, monthly, yearly or scheduled basis.
9. Include capability for statistical data manipulation and extraction.
10. Provide capability to generate four types of reports: Statistical detail reports, summary reports, trend graphic plots, x-y graphic plots.

X. Parameter Save/Restore: Store most current operating system, parameter changes, and modifications on disk or diskette.

Y. Data Collection:
1. Automatically collect and store in disk files.
2. Daily electrical energy consumption, peak demand, and time of peak demand for up to electrical meters over 2 year period.
3. Daily billable electrical energy consumption and time for up to 1024 zones over a 10 year period.
4. Provide archiving of stored data for use with system supplied custom reports.
5. Generate, store, and retrieve library symbols.
6. Single or double height characters.
7. Sixty (60) dynamic points of data per graphic page.
8. Animated graphics for discrete points.
9. Analog bar graphs.
10. Display real time value of each input or output line diagram fashion.

2.7 HVAC CONTROL PROGRAMS

A. General:
1. Support Inch-pounds and SI (metric) units of measurement.
2. Identify each HVAC Control system.

B. Optimal Run Time:

1. Control start-up and shutdown times of HVAC equipment for both heating and cooling.
2. Base on occupancy schedules, outside air temperature, seasonal requirements, and interior room mass temperature.
3. Start-up systems by using outside air temperature, room mass temperatures, and adaptive model prediction for how long building takes to warm up or cool down under different conditions.
4. Use outside air temperature to determine early shut down with ventilation override.
5. Analyze multiple building mass sensors to determine seasonal mode and worse case condition for each day.
6. Operator commands:
   a. Define term schedule
   b. Add/delete fan status point.
   c. Add/delete outside air temperature point.
   d. Add/delete mass temperature point.
   e. Define heating/cooling parameters.
   f. Define mass sensor heating/cooling parameters.
   g. Lock/unlock program.
   h. Request optimal run time control summary.
   i. Request optimal run time mass temperature summary.
   j. Request HVAC point summary.
   k. Request HVAC saving profile summary.
7. Control Summary:
   a. HVAC Control system begin/end status.
   b. Optimal run time lock/unlock control status.
   c. Heating/cooling mode status.
   d. Optimal run time schedule.
   e. Start/Stop times.
   f. Selected mass temperature point ID.
   g. Optimal run time system normal start times.
   h. Occupancy and vacancy times.
   i. Optimal run time system heating/cooling mode parameters.
8. HVAC point summary:
   a. Control system identifier and status.
   b. Point ID and status.
   c. Outside air temperature point ID and status.
   d. Mass temperature point ID and point.
   e. Calculated optimal start and stop times.
   f. Period start.

C. Supply Air Reset:

1. Monitor heating and cooling loads in building spaces, terminal reheat systems, both hot deck and cold deck temperatures on dual duct and multizone systems, single zone unit discharge temperatures.
2. Adjust discharge temperatures to most energy efficient levels satisfying measured load by:
   a. Raising cooling temperatures to highest possible value.
   b. Reducing heating temperatures to lowest possible level.
3. Space load summary:
   a. HVAC system status.
   b. Optimal run time status.
   c. Heating/cooling loop status.

d. Space load point ID.
e. Current space load point value.
f. Control heat/cool limited.
g. Gain factor.
h. Calculated reset values.
i. Fan status point ID and status.
j. Control discharge temperature point ID and status.
k. Space load point ID and status.
l. Air flow rate point ID and status.

D. Enthalpy Switchover:
1. Calculate outside and return air enthalpy using measured temperature and relative humidity; determine energy expended and control outside and return air dampers.

PART 3 EXECUTION

3.1 EXAMINATION

A. Verify existing conditions before starting work.

B. Verify that conditioned power supply is available to the control units and to the operator work station. Verify that field end devices, wiring, and pneumatic tubing is installed prior to installation proceeding.

3.2 INSTALLATION

A. Install control units and other hardware in position on permanent walls where not subject to excessive vibration.

B. Reuse of existing power supply is acceptable if it meets the intent of this specification for quality and longevity purposes.

C. Install software in control units and in operator work station. Implement all features of programs to specified requirements and appropriate to sequence of operation. Refer to Section 23 0993.

D. Provide with 120v AC, 20 amp dedicated emergency power circuit to each programmable control unit, panel and transformer.

E. Provide with 120v AC, 20 amp dedicated emergency power circuit to each programmable control unit, panel and transformer.

F. Provide with 120v AC, 20 amp dedicated emergency power circuit to each air terminal unit transformer.

G. Provide extension of 120v, 20 amp circuits and circuit breakers from emergency power panels for all equipment, transformers and panel power.

H. Provide local UPS power supplies for all system panels and equipment.

I. Provide conduit and electrical wiring in accordance with Section 26 2717. Electrical material and installation shall be in accordance with appropriate requirements of Division 26.

3.3 MANUFACTURER'S FIELD SERVICES

A. Start and commission systems. Allow sufficient time for start-up and commissioning prior to placing control systems in permanent operation.

B. Provide service engineer to instruct Owner's representative in operation of systems plant and equipment for 3 day period.

C. Provide basic operator training for 2 persons on data display, alarm and status descriptors, requesting data, execution of commands and request of logs. Include a minimum of 16 hours dedicated instructor time. Provide training on site.

3.4 DEMONSTRATION AND INSTRUCTIONS

A. Demonstrate complete and operating system to Owner.

END OF SECTION

ALTERNATE #2 - ACTUATOR REPLACEMENT AND DAMPER REPAIR SCOPE OF WORK (10/03/2016)

1. ACTUATOR REPLACEMENT SERVICES AND DAMPER REPAIR/REPLACEMENT SERVICES TO BE PROVIDED. Based on Owner's drawings and other information provided to the Contractor, Contractor shall provide the following replacement and repair services with respect to Owner's Dampers (collectively, "Repair Services"):
    a. Using commercially reasonable efforts, Contractor shall determine the appropriate Actuator to replace the old defective Actuator. The replacement Actuator shall be UL555S listed.
    b. The following items shall be verified for the replacement Actuator:
        i. Temperature: The replacement Actuator shall operate at the rating of the original Actuator.
        ii. Torque: The replacement Actuator shall have equal or greater torque than the failed Actuator.
        iii. Time: The replacement Actuator shall drive open and spring closed at the same or faster speed than the original.
        iv. Voltage: The Replacement Actuator shall have the same voltage as the original.
        v. Amperage: The replacement Actuator(s) shall not draw more amperage than the original(s) and cause the total amperage to rise above that which the electrical circuit breaker is designed to carry.
    c. With the assistance and guidance of Owner in locating the applicable source, disconnect power to the old Actuator.
    d. The old Actuator will be removed and the Damper shall be cleaned.
    e. Open and close the blades of the Damper that is having the Actuator replaced to ensure they are operational.
    f. Close the Damper and place Actuator on shaft in sprung closed direction.
    g. Mark holes and install anti-rotation strap; set anti-rotation strap with one screw and rotate out of way of U-slot in Actuator. Close tight, and then insert anti-rotation stud and second screw.
    h. Test functions after installation of new Actuator;
        i. Power Actuator to open the Damper, take digital photograph of open Damper.
        ii. Cut power to Actuator to close Damper; take digital photograph of closed Damper providing proof of operational Actuator.
        iii. Power Actuator to reopen Damper; take digital photograph of open Damper to provide proof of operational Actuator.
    i. Additional Dampers not in need of Actuator Replacement Services, but in need of repair shall also be repaired by Contractor.
        i. Dampers in need of complete replacement shall be replaced with Dampers listed by Underwriters Laboratory as UL555 (Fire Dampers), UL555S (Smoke Dampers), UL555C (Ceiling Dampers).
            1. The proper rating (e.g. 1 1/2, 3 hours and Dynamic Rated or Static Rated) shall be determined for replacement Damper.
            2. Standard Damper Installation issues shall be considered prior to installation:
                a. Damper Size
                b. Where should Damper be located
                c. Expansion Clearance
                d. Retaining Angle(s)
                e. Sleeve requirements
                f. Duct to Sleeve Connections
        ii. The Dampers in need of repair that Contractor deems is outside Contractor’s scope of work shall be identified to the Owner.

2. Report. On conclusion of the performance of the Repair Services, Contractor shall provide Owner with a Final Report ("Report"), which is intended to provide Owner documentation of repair and replacement services and shall be suitable for submission to applicable agencies, such as the Owner's local fire protection agencies, and to the Owner's Risk Management Department or Insurance Company. The Final Report shall include:
    a. Daily Field Report(s) listing each Damper that had a replacement Actuator installed or Damper repaired or replaced, the Damper's location, and Damper's identifier number.
    b. The name and signature of the Contractor's Service Technician that performed the Repair Service, and the date of the service.
    c. A check list completed by the Service Technician that all post-installation Test Functions.
    d. The original Daily Field Report(s) shall be left with the Owner.
    e. The Final Report shall list every Damper that had a replacement Actuator installed or Damper repaired or replaced, a digital photograph of every Damper with a replacement Actuator or repaired Damper "open", "closed", and "reopen" demonstrating the operability of the new Actuator or repaired Damper. The pictures shall be accompanied by a detailed summary report listing the location of the Damper(s) with replacement Actuator(s), replacement Damper(s), the date(s) of installation, the model of actuator(s) installed, and the identification number of the Damper.

The Base Bid for Repair Services is as follows price shall be based on number of actuators installed, number of Dampers repair and Dampers replaced. Prices provide below include the labor and material for the Repair Services as well as labor to re-inspect the "failed Damper" as required in NFPA 80 and 105.

ITEM	SIZE	QUANTITY	UNT PRICE	EXTENDED PRICE
Fire Damper	≤ 8" x 6"	-		
	≤ 16"x14"	-		
	≤ 32"x28"	-		
	≤ 48"x40"	-		
Smoke Damper	≤ 8" x 6"	-		
	≤ 16"x14"	-		
	≤ 32"x28"	-		
	≤ 48"x40"	-		
Combo Fire/Smoke Damper	≤ 8" x 6"	-		
	≤ 16"x14"	-		
	≤ 32"x28"	-		
	≤ 48"x40"	-		
Actuator		15		
Damper Repair		-		
Access Door Installation	14" x 14"	-		
	12" x 12"	5		
	8" x 8"	-		
	Small Rd.	-		
Damper Re-Inspection		-		
Dry Wall Hatch		3		
Total Bid				**$**

AS-BUILT COPY

Temperature Control System

For
Berwyn Public Safety

Berwyn, IL

By

Control Solutions™ inc

"Excellence Through Service"

Precision Environmental, Process & Energy Control

631 E BUTTERFIELD ROAD
SUITE 314
LOMBARD IL

Actuators

- M B pneumatic, valve, pilot
- pneumatic, valve
- pneumatic, damper
- M B pneumatic, damper, pilot
- electronic

Control Devices

- AB A B 3-way valve
- 2-way valve
- damper
- VFD variable freq drive
- motor starter

Wiring Symbols

- flow actuated
- temp actuated
- pressure actuated
- limit switch
- pilot light
- transformer

Temperature

- duct probe
- space
- outdoor
- averaging
- immersion

Humidity

- duct probe
- space
- outdoor

Flow

- F pitot tube
- F air station

Pressure

- absolute
- space static
- differential

Lines

- common ground
- wire
- drawing line
- device outline
- air line

Smoke

- smoke detector

General

- relay contact
- XX/# wire tag
- contact

CONTROL SOLUTIONS / RICH HOUSH SERVICES INC.

PROPRIETARY PROPERTY

THIS DRAWING IS THE PROPRIETARY PROPERTY OF CONTROL SOLUTIONS / RICH HOUSH SERVICES INC. AND MUST NOT BE USED EXCEPT IN CONNECTION WITH OUR WORK, NOR IN ANY MANNER DISCLOSED TO ANY THIRD PARTY WITHOUT CSI'S / RHSI'S PRIOR WRITTEN CONSENT. ALL RIGHTS OF DESIGN AND INVENTION ARE RESERVED.

NO	DATE	BY	REVISION DESCRIPTION
1	6/1/01	JT	As-Built
2			
3			
4			

FILE: Berwyn-asbuilt.vsd

DRAWING TYPE:

ALL DIMENSIONS TO BE FIELD VERIFIED BEFORE ORDERING AND/OR FABRICATION OF COMPONENTS

FINAL APPROVED FOR CONSTRUCTION

OWNER TITLE DATE

Control Solutions TITLE DATE

Control Solutions™
"Excellence Through Service"
Precision Environmental, Process & Energy Control
631 E BUTTERFIELD ROAD
SUITE 314
LOMBARD IL
PHONE 630 852-1700
FAX 630 852-8030

DATE	6/9/00
ENGINEERED BY	Krista Tapscott
DRAWN BY	Krista Tapscott
APPROVED BY	
DATE APPROVED	
CUSTOMER NAME	Berwyn Public Safety
LOCATION	Berwyn, IL
DRAWING DESCRIPTION	TITLE

903291-1 of 24

AS-BUILT COPY

INDEX

903291- 1 TITLE
903291- 2 INDEX
903291- 3 RISER
903291- 4 VAV BOX
903291- 5 FAN POWERED BOXES
903291- 6 HOT WATER SYSTEM
903291- 7 BOILER WIRING DIAGRAM
903291- 8 P-1:BOILER ROOM CONTROL PANEL
903291- 9 P-1: CONTINUED
903291- 10 AHU-3, FIRING RANGE CONTROLS
903291- 11 PRESSURIZATION CONTROLS
903291- 12 PRESSURIZATION CONTROLS (2)
903291- 13 PRESSURIZATION CONTROLS (3)
903291- 14 P-2: AHU-3 CONTROL PANEL
903291- 15 EXHAUST FANS, ISO VALVES
903291- 16 P-3: EXHAUST FAN CONTROL PANEL
903291- 17 EDH, VAV0-2 HUMIDITY, ISO VALVE
903291- 18 P-4: EDH, VAV0-2 HUM PANEL
903291- 19 AHU-2, RF-1, ISO VALVES, FIRE
903291- 20 P-5: AHU-2, FIRE, ISO VLV PANEL
903291- 21 RTU-1
903291- 22 RTU-1 CONTROLLER
903291- 23 RTU-2
903291- 24 CUH-1, UH-1 to UH-5

CONTROL SOLUTIONS / RICH HOUSH SERVICES INC.

PROPRIETARY PROPERTY

THIS DRAWING IS THE PROPRIETARY PROPERTY OF CONTROL SOLUTIONS / RICH HOUSH SERVICES INC. AND MUST NOT BE USED EXCEPT IN CONNECTION WITH OUR WORK, NOR IN ANY MANNER DISCLOSED TO ANY THIRD PARTY WITHOUT CS/S / RHS/S PRIOR WRITTEN CONSENT. ALL RIGHTS OF DESIGN AND INVENTION ARE RESERVED

NO.	DATE	BY	REVISION DESCRIPTION
1	6/1/01	JT	As-Built
2			
3			
4			

FILE: Berwyn-asbuilt.vsd

DRAWING TYPE:

ALL DIMENSIONS TO BE FIELD VERIFIED BEFORE ORDERING AND/OR FABRICATION OF COMPONENTS

Control Solutions
631 E BUTTERFIELD ROAD
SUITE 314
LOMBARD IL
PHONE 630 652-1700
FAX 630 652-9330

DATE: 6/9/00
ENGINEERED BY: Krista Tapscott
DRAWN BY: Krista Tapscott
APPROVED BY:
DATE APPROVED:

FINAL APPROVED FOR CONSTRUCTION

OWNER TITLE DATE

Control Solutions TITLE DATE

CUSTOMER NAME: Berwyn Public Safety
LOCATION: Berwyn, IL
DRAWING DESCRIPTION: INDEX

AS-BUILT COPY

RISER

TAG	DESCRIPTION	TYPE	PART NUMBER	MFGR.	QTY.
IC	INTERFACE CARD	-	XPC500	HONEYWELL	1
SUB	SUBMODULE	-	XD505A	HONEYWELL	1
EOL	END OF LINE TERMINATION MODULE	-	209541B	HONEYWELL	1
MOD	MODEM	-	33.6K SPORSTER	US ROBOTICS	1
PRTR	DOT MATRIX PRINTER	-		EPSON	1

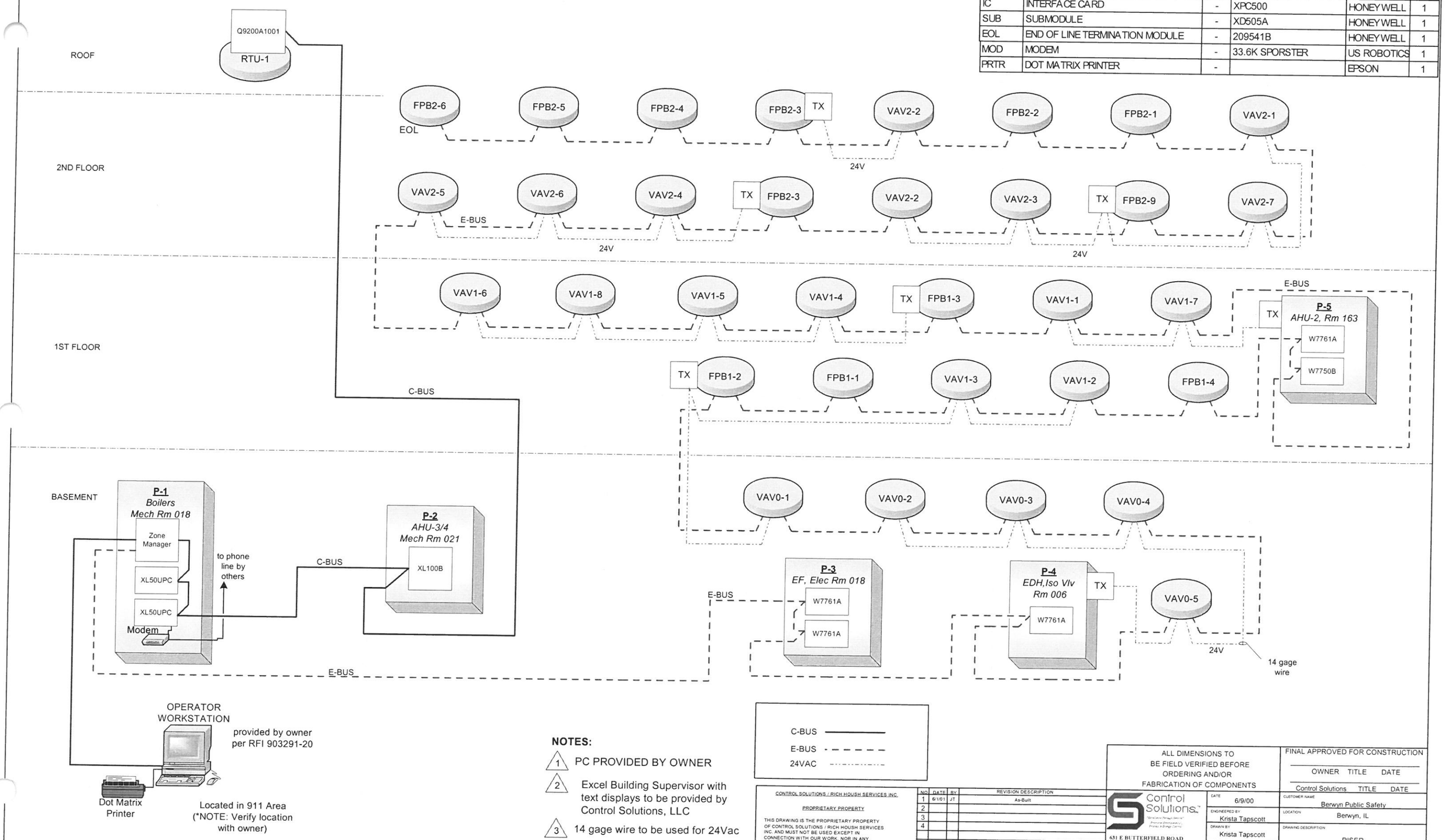

NOTES:

1. PC PROVIDED BY OWNER
2. Excel Building Supervisor with text displays to be provided by Control Solutions, LLC
3. 14 gage wire to be used for 24Vac

C-BUS
E-BUS
24VAC

CONTROL SOLUTIONS / RICH HOUSH SERVICES INC.

PROPRIETARY PROPERTY

THIS DRAWING IS THE PROPRIETARY PROPERTY OF CONTROL SOLUTIONS / RICH HOUSH SERVICES INC. AND MUST NOT BE USED EXCEPT IN CONNECTION WITH OUR WORK, NOR IN ANY MANNER DISCLOSED TO ANY THIRD PARTY WITHOUT CSI'S / RHS'S PRIOR WRITTEN CONSENT. ALL RIGHTS OF DESIGN AND INVENTION ARE RESERVED.

NO.	DATE	BY	REVISION DESCRIPTION
1	6/1/01	JT	As-Built
2			
3			
4			

FILE: Berwyn-asbuilt.vsd

DRAWING TYPE:

ALL DIMENSIONS TO BE FIELD VERIFIED BEFORE ORDERING AND/OR FABRICATION OF COMPONENTS

FINAL APPROVED FOR CONSTRUCTION

OWNER TITLE DATE

Control Solutions TITLE DATE

Control Solutions
631 E. BUTTERFIELD ROAD
SUITE 314
LOMBARD IL
PHONE 630 652-1700
FAX 630 652-9330

DATE	6/9/00
ENGINEERED BY	Krista Tapscott
DRAWN BY	Krista Tapscott
APPROVED BY	
DATE APPROVED	
CUSTOMER NAME	Berwyn Public Safety
LOCATION	Berwyn, IL
DRAWING DESCRIPTION	RISER

903291-3 of 24

AS-BUILT COPY

VAV BOX

TYPICAL OF 20 BOXES

TAG	DESCRIPTION	TYPE	PART NUMBER	MFGR.	QTY.
ZS	ZONE SENSOR	AI	ACI/20K-NTC-SPO	ACI	20
V-1	VALVE	AO	SEE VALVE SCHEDULE		
C-1	CONTROLLER		W7751H2017	HONEYWELL	20
TX-1	TRANSFORMER		MUC-024-100-TF-CB	CORE	7

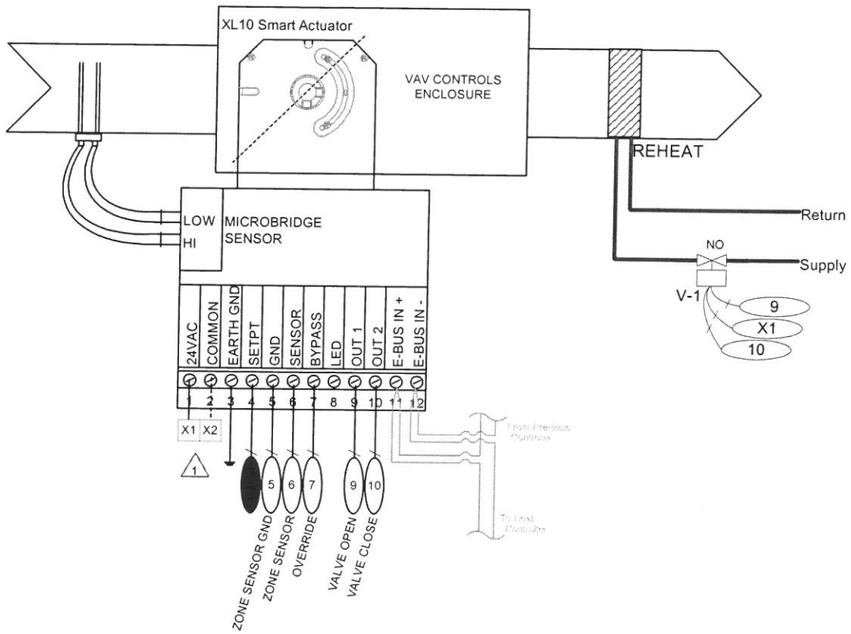

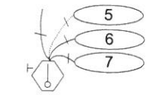

ZONE SENSOR

SEQUENCE OF OPERATIONS

VAV Box Control:

1. On a call for cooling, as the room temperature increases, the room thermostat will modulate the airflow towards its maximum CFM setting to maintain room temperature.
2. On a call for heating, as the room temperature decreases, the room thermostat modulates the airflow towards its minimum setting to maintain room temperature. On a further call for heating the hot water valve shall modulate.
3. VAV's 0-2 and 1-8 shall also have humidity control. If the space humidity is above 60%, the damper shall open to its maximum. Once humidity drops to below 50%, the damper shall resume normal control.

HOT WATER VALVE ACTUATOR

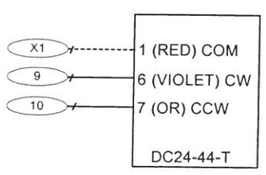

1 SEE PAGE 903291-3 FOR DETAILS ON POWER SOURCE

CONTROL SOLUTIONS / RICH HOUSH SERVICES INC.

PROPRIETARY PROPERTY

THIS DRAWING IS THE PROPRIETARY PROPERTY OF CONTROL SOLUTIONS / RICH HOUSH SERVICES INC. AND MUST NOT BE USED EXCEPT IN CONNECTION WITH OUR WORK, NOR IN ANY MANNER DISCLOSED TO ANY THIRD PARTY WITHOUT CS'S / RHS'S PRIOR WRITTEN CONSENT. ALL RIGHTS OF DESIGN AND INVENTION ARE RESERVED

NO.	DATE	BY	REVISION DESCRIPTION
1	6/1/01	JT	As-Built
2			
3			
4			

FILE: Berwyn-asbuilt.vsd

DRAWING TYPE:

ALL DIMENSIONS TO BE FIELD VERIFIED BEFORE ORDERING AND/OR FABRICATION OF COMPONENTS

Control Solutions
631 E BUTTERFIELD ROAD
SUITE 314
LOMBARD IL
PHONE 630 652-1700
FAX 630 652-9030

DATE: 6/9/00

ENGINEERED BY: Krista Tapscott

DRAWN BY: Krista Tapscott

APPROVED BY:

DATE APPROVED:

FINAL APPROVED FOR CONSTRUCTION

OWNER TITLE DATE

Control Solutions TITLE DATE

CUSTOMER NAME: Berwyn Public Safety

LOCATION: Berwyn, IL

DRAWING DESCRIPTION: VAV BOX

AS-BUILT COPY

FAN POWERED BOXES

TYPICAL OF 13 BOXES

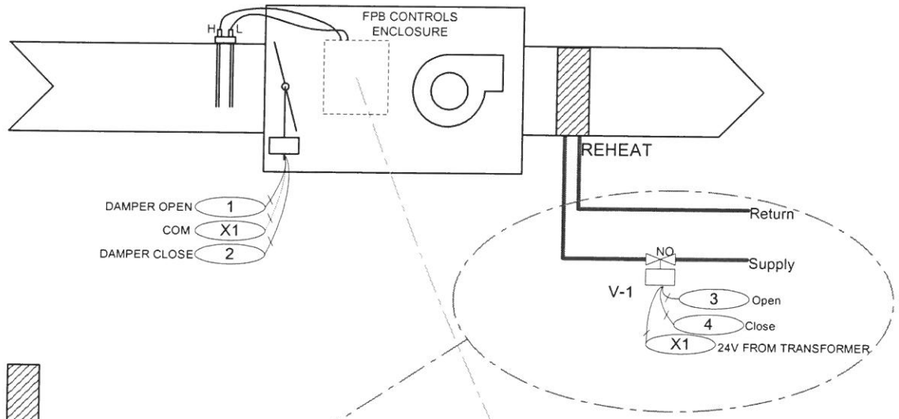

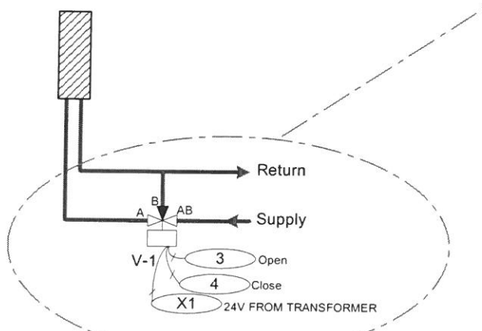

3-way valve typical of FPB1-1 and FPB2-5

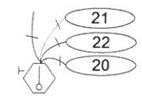

ZONE SENSOR

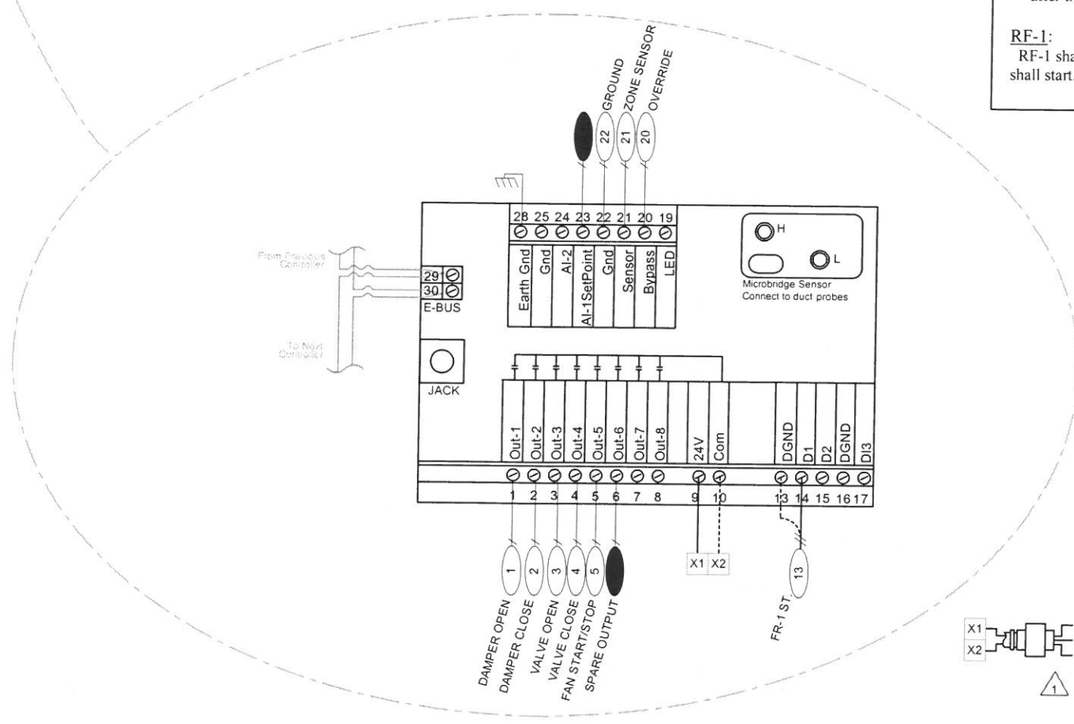

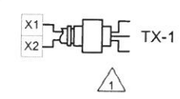

TAG	DESCRIPTION	TYPE	PART NUMBER	MFGR.	QTY.
ZS	ZONE SENSOR	AI	ACI/20K-NTC-SPO	ACI	13
D-1	DAMPER	AO	ML6161D2006	HONEYWELL	13
V-1	VALVE	AO	SEE VALVE SCHEDULE		
C-1	CONTROLLER		W7751B2002	HONEYWELL	13
DAT	DISCHARGE AIR TEMP		PROVIDED BY UNIT MANUF.		
RH	ROOM HUMIDITY		PROVIDED BY UNIT MANUF.		
TT-1	RF-1 WALL STAT		T451A2007	HONEYWELL	1
RF1ST	RF-1 STATUS	DI	H-800	VERIS	1
	SNAPTRACK		207912	HONEYWELL	13

SEQUENCE OF OPERATIONS

FAN POWERED BOXES:

1. In the cooling mode, as the room temperature increases, the room thermostat modulates the cold airflow from the lower minimum to the maximum setting.
2. In the heating mode, as the room temperature decreases the airflow will modulate to its minimum setting. If space temperature continues to remain below setpoint the hot water valve is modulated.
3. Fan shall be start/stopped based on user adjustable time schedule in sequence with its associated air handler.
4. Space temperature setpoint shall be used in unoccupied mode to maintain setback temperature setpoint. When temperature falls below setback temperature setpoint damper shall open fully and associated air handler shall enable its night setback sequence.
5. In fire mode, the BAS shall signal all supply fans to shut down. The system shall resume normal operation after the fire alarm system has been manually reset.

RF-1:

RF-1 shall be controlled by a wall mounted stat. When the room temperature exceeds 80F (adj.), the fan shall start. The status on RF-1 shall be monitored by the BAS.

RETURN FAN RF-1

POWERED FROM ELECTRICAL PANEL LPS-2
SERVES 2nd FL ELECTRICAL CLOSET

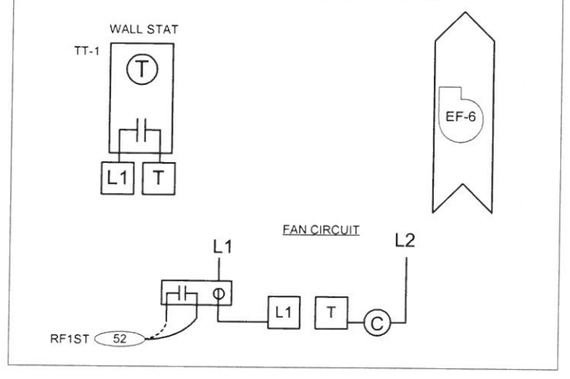

DAMPER ACTUATOR

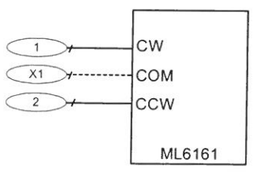

HOT WATER VALVE ACTUATOR

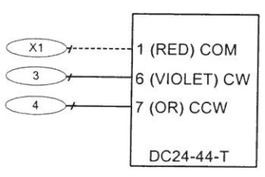

FAN STARTER WIRING

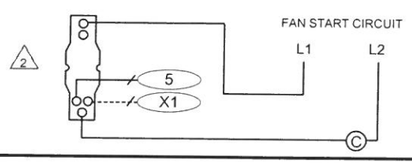

1 TRANSFORMER PROVIDED BY BOX MANUFACTURER

2 RELAY LOCATED IN FPB

CONTROL SOLUTIONS / RICH HOUSH SERVICES INC.

PROPRIETARY PROPERTY

THIS DRAWING IS THE PROPRIETARY PROPERTY OF CONTROL SOLUTIONS / RICH HOUSH SERVICES INC. AND MUST NOT BE USED EXCEPT IN CONNECTION WITH OUR WORK, NOR IN ANY MANNER DISCLOSED TO ANY THIRD PARTY WITHOUT CSI'S / RHSI'S PRIOR WRITTEN CONSENT. ALL RIGHTS OF DESIGN AND INVENTION ARE RESERVED

NO	DATE	BY	REVISION DESCRIPTION
1	6/1/01	JT	As-Built
2			
3			
4			

FILE: Berwyn-asbuilt.vsd

DRAWING TYPE:

ALL DIMENSIONS TO BE FIELD VERIFIED BEFORE ORDERING AND/OR FABRICATION OF COMPONENTS

Control Solutions
631 E BUTTERFIELD ROAD
SUITE 314
LOMBARD IL
PHONE 630 852-1700
FAX 630 852-8030

FINAL APPROVED FOR CONSTRUCTION

OWNER	TITLE	DATE
Control Solutions	TITLE	DATE

DATE	6/9/00
ENGINEERED BY	Krista Tapscott
DRAWN BY	Krista Tapscott
APPROVED BY	
DATE APPROVED	
CUSTOMER NAME	Berwyn Public Safety
LOCATION	Berwyn, IL
DRAWING DESCRIPTION	FAN POWERED BOXES

AS-BUILT COPY

HOT WATER SYSTEM

FOR CONTROL PANEL SEE PAGE 903291-8
ALL WIRING TERMINATED AT CONTROL PANEL UNLESS NOTED

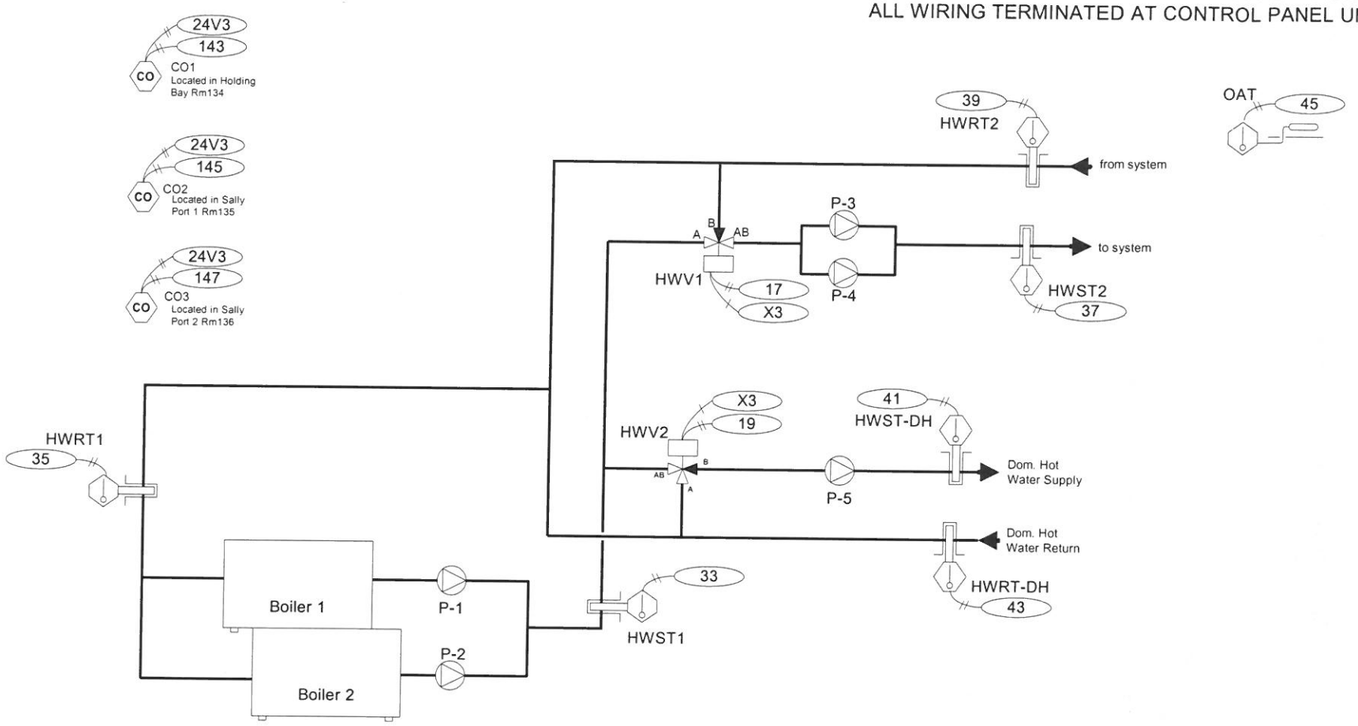

TAG	DESCRIPTION	TYPE	PART NUMBER	MFGR.	QTY.
HWST1	PRIMARY HW SUPPLY TEMP	AI	ACI/20K-NTC-14"	ACI	1
HWRT1	PRIMARY HW RETURN TEMP	AI	ACI/20K-NTC-14"	ACI	1
HWST2	SECOND HW SUPPLY TEMP	AI	ACI/20K-NTC-14"	ACI	1
HWRT2	SECOND HW RETURN TEMP	AI	ACI/20K-NTC-14"	ACI	1
HWST-DH	DOMESTIC HW SUPPLY TEMP	AI	ACI/20K-NTC-14"	ACI	1
HWRT-DH	DOMESTIC HW RETURN TEMP	AI	ACI/20K-NTC-14"	ACI	1
OAT	OUTDOOR AIR TEMP	AI	ACI/20K-NTC-O	ACI	1
CO1	CO SENSOR 1	AI	ACI/CO	ACI	1
CO2	CO SENSOR 2	AI	ACI/CO	ACI	1
CO3	CO SENSOR 3	AI	ACI/CO	ACI	1
HWV1	PRIMARY HOT WATER VALVE	AO	SEE VALVE SCHEDULE		
HWV2	DOMESTIC HOT WATER VALVE	AO	SEE VALVE SCHEDULE		
EPALM	EJECTOR PUMP ALARM	DI	RH1B-AC120/SH1B	IDEC	1
SPALM	SUMP PUMP ALARM	DI	RH1B-AC120/SH1B	IDEC	1
P1ST	PUMP 1 STATUS	DI	H-708	KELE	1
P2ST	PUMP 2 STATUS	DI	H-708	KELE	1
P3ST	PUMP 3 STATUS	DI	H-708	VERIS	1
P4ST	PUMP 4 STATUS	DI	H-708	VERIS	1
P5ST	PUMP 5 STATUS	DI	H-800	VERIS	1
P1S/S	PUMP 1 START/STOP		RIBU1C	CORE	1
P2S/S	PUMP2 START/STOP		RIBU1C	CORE	1
P3S/S	PUMP 3 START/STOP	DO	RIBU1C	CORE	1
P4S/S	PUMP 4 START/STOP	DO	RIBU1C	CORE	1
P5S/S	PUMP 5 START/STOP	DO	RIBU1C	CORE	1
EF1ST	EXHAUST FAN 1 STATUS	DI	H-708	VERIS	1
EF1S/S	EXHAUST FAN 1 START/STOP	DO	RIBU1C	CORE	1
B1ST	BOILER 1 STATUS	DI	INTERLOCKED TO BOILER PANEL		
B2ST	BOILER 2 STATUS	DI	INTERLOCKED TO BOILER PANEL		
B1S/S	BOILER 1 START/STOP	DO	RH1B-AC24/SH1B	IDEC	1
B2S/S	BOILER 2 START/STOP	DO	RH1B-AC24/SH1B	IDEC	1
B1ALM	BOILER 1 ALARM	DI	RH1B-AC120/SH1B	IDEC	1
B2ALM	BOILER 2 ALARM	DI	RH1B-AC120/SH1B	IDEC	1

SEQUENCE OF OPERATIONS

HOT WATER SYSTEM:

The BAS shall enable and disable each boiler. The first boiler on shall be the first boiler off on a rotating sequence to allow for even wear. If the first boiler is in alarm, the second shall be enabled.

The boiler shall sequence the firing of the stages in each boiler. Pumps 1 and 2 shall be hardwired to its respective boiler such that the pump starts when the boiler is enabled. The boiler high limit shall be set at 210F and shall be hardwired to the boiler. The BAS shall prevent the return temperature from dropping below 140F.

When the primary heating loop is in manual mode, the boilers shall operate to maintain a primary hot water supply temperature equal to 200F minus the outdoor air temperature. However, the primary hot water supply temperature shall never drop below 160F.

When the primary heating loop is in automatic mode, the primary hot water supply temperature shall be adjusted to allow accurate supply air temperature control, domestic hot water temperature control, and radiant loop flow, while preventing valve hunting.

The primary heating loop supply temperature reset schedule shall be overridden by a demand for higher temperatures from the domestic hot water system, the radiation secondary loops, or the domestic hot water secondary loop.

EJECTOR AND SUMP PUMPS:

These pumps shall be controlled by local controllers. The BAS shall only monitor pumps for high limit alarm.

EXHAUST FAN 1: Exhaust fan 1 shall be started and stopped by the BAS based upon the occupied/unoccupied schedule. The status shall be monitored by the BAS.

In fire alarm mode, the exhaust fan, boiler, and hot water pumps shall stop. The system shall resume normal operation when the alarm system has been manually reset.

HOT WATER PUMPS 1, 2

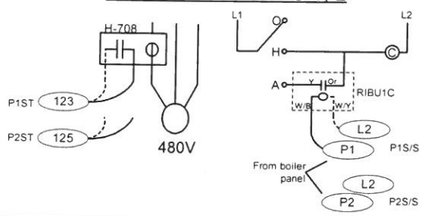

HOT WATER PUMPS 3, 4

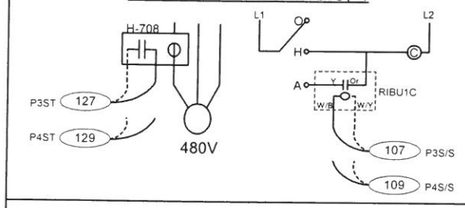

HOT WATER PUMP 5

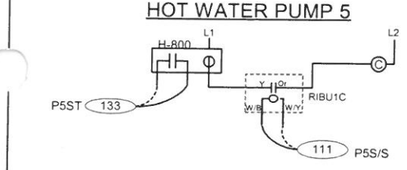

EJECTOR PUMP ALARM

VERIFY TERMINAL CONNECTIONS IN FIELD

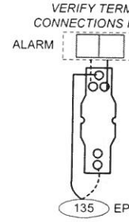

SUMP PUMP ALARM

VERIFY TERMINAL CONNECTIONS IN FIELD

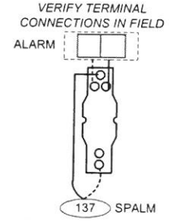

HWV1, HWV2

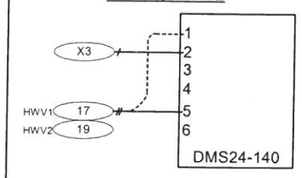

BOILER CONTROL PANEL

VERIFY TERMINAL CONNECTIONS IN FIELD
FOR DETAILED BOILER WIRING, SEE NEXT PAGE

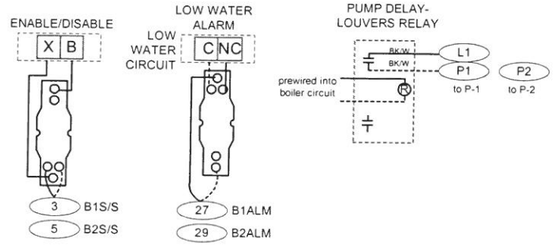

EXHAUST FAN EF-1 STARTER CIRCUIT

SOURCED FROM ELECTRICAL PANEL DP-1

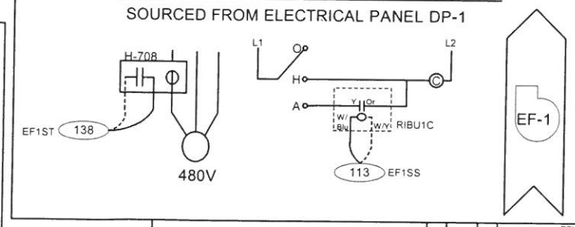

CONTROL SOLUTIONS / RICH HOUSH SERVICES INC.

PROPRIETARY PROPERTY

THIS DRAWING IS THE PROPRIETARY PROPERTY OF CONTROL SOLUTIONS / RICH HOUSH SERVICES INC. AND MUST NOT BE USED EXCEPT IN CONNECTION WITH OUR WORK, NOR IN ANY MANNER DISCLOSED TO ANY THIRD PARTY WITHOUT CSI'S / RHS'S PRIOR WRITTEN CONSENT. ALL RIGHTS OF DESIGN AND INVENTION ARE RESERVED.

NO.	DATE	BY	REVISION DESCRIPTION
1	6/1/01	JT	As-Built
2			
3			
4			

FILE: Berwyn-asbuilt.vsd
DRAWING TYPE:

ALL DIMENSIONS TO BE FIELD VERIFIED BEFORE ORDERING AND/OR FABRICATION OF COMPONENTS

Control Solutions
631 E. BUTTERFIELD ROAD
SUITE 314
LOMBARD IL
PHONE 630 852-1700
FAX 630 852-9330

FINAL APPROVED FOR CONSTRUCTION

OWNER	TITLE	DATE
Control Solutions	TITLE	DATE

DATE	6/9/00
ENGINEERED BY	Krista Tapscott
DRAWN BY	Krista Tapscott
APPROVED BY	
DATE APPROVED	
CUSTOMER NAME	Berwyn Public Safety
LOCATION	Berwyn, IL
DRAWING DESCRIPTION	HOT WATER SYSTEM

AS-BUILT COPY

BOILER WIRING DIAGRAM

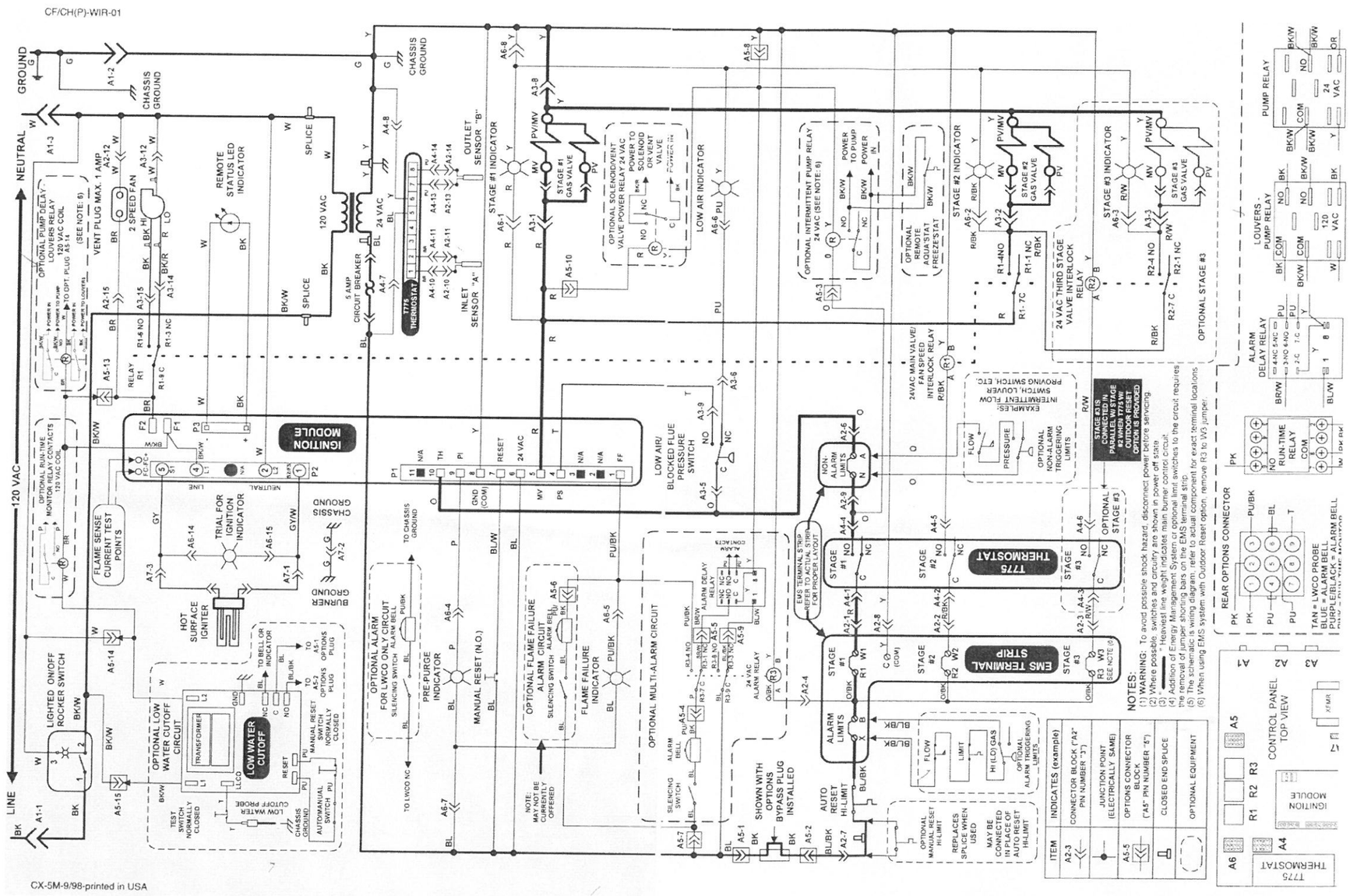

NOTE: Boiler wiring diagram by Lochinvar. For more detailed information, see Lochinvar's full submittal.

Options taken are:
- -Low water cut-off
- -Flow switch
- -Pump Delay - Louvers Relay

CONTROL SOLUTIONS / RICH HOUSH SERVICES INC.

PROPRIETARY PROPERTY

THIS DRAWING IS THE PROPRIETARY PROPERTY OF CONTROL SOLUTIONS / RICH HOUSH SERVICES INC. AND MUST NOT BE USED EXCEPT IN CONNECTION WITH OUR WORK. NOR IN ANY MANNER DISCLOSED TO ANY THIRD PARTY WITHOUT CSI/S / RHS/S PRIOR WRITTEN CONSENT. ALL RIGHTS OF DESIGN AND INVENTION ARE RESERVED.

NO	DATE	BY	REVISION DESCRIPTION
1	6/1/01	JT	As-Built
2			
3			
4			

FILE: Berwyn-asbuilt.vsd

DRAWING TYPE:

ALL DIMENSIONS TO BE FIELD VERIFIED BEFORE ORDERING AND/OR FABRICATION OF COMPONENTS

FINAL APPROVED FOR CONSTRUCTION

OWNER TITLE DATE

Control Solutions TITLE DATE

Control Solutions

631 E BUTTERFIELD ROAD
SUITE 314
LOMBARD IL
PHONE 630 652-1700
FAX 630 652-6030

DATE	6/9/00
ENGINEERED BY	Krista Tapscott
DRAWN BY	Krista Tapscott
APPROVED BY	
DATE APPROVED	
CUSTOMER NAME	Berwyn Public Safety
LOCATION	Berwyn, IL
DRAWING DESCRIPTION	BOILER WIRING DIAGRAM

903291-7 of 24

AS-BUILT COPY

P-1:BOILER ROOM CONTROL PANEL

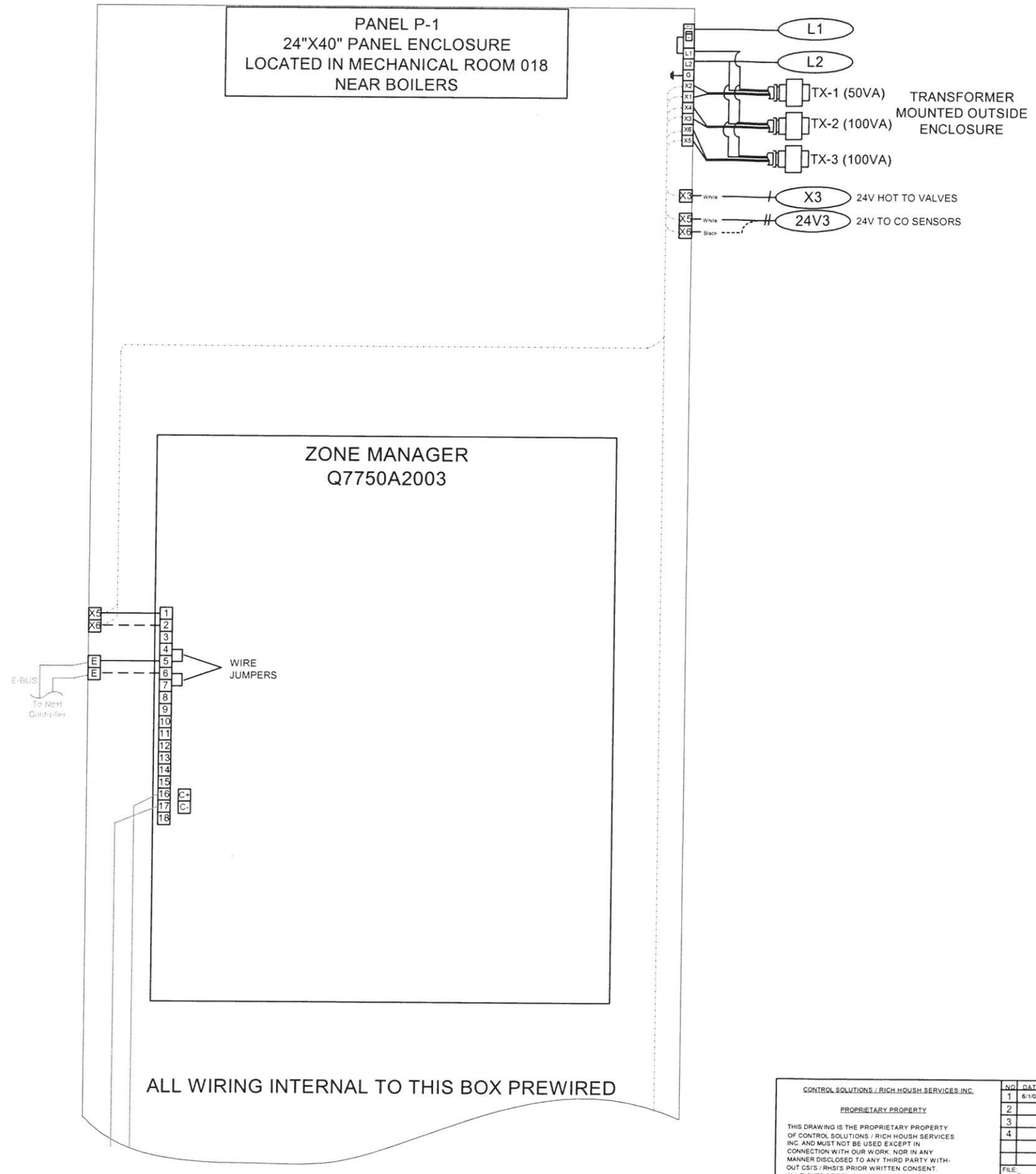

TAG	DESCRIPTION	TYPE	PART NUMBER	MFGR.	QTY.
C-1	CONTROLLER		XL50UPC	HONEYWELL	1
C-2	CONTROLLER		XL50UPC	HONEYWELL	1
ZM	ZONE MANAGER		Q7750A2003	HONEYWELL	1
SM-1	SUBMODULE		XD505A	HONEYWELL	1
TX-1	TRANSFORMER-CONTROLLER		MUC-024-050-TF-CB	CORE	1
TX-2	TRANSFORMER-C-1		MUC-024-100-TF-CB	CORE	1
TX-3	TRANSFORMER-C-2		MUC-024-100-TF-CB	CORE	1
P-1	24 X 40 X 10 ENCLOSURE		AM1006026	GRAYBAR	1
	24 X 40 BACKPLATE		AMPZ10060	GRAYBAR	1
	KEYED LOCK		AMFL2844	GRAYBAR	1

CONTROL SOLUTIONS / RICH HOUSH SERVICES INC.

PROPRIETARY PROPERTY

THIS DRAWING IS THE PROPRIETARY PROPERTY OF CONTROL SOLUTIONS / RICH HOUSH SERVICES INC. AND MUST NOT BE USED EXCEPT IN CONNECTION WITH OUR WORK, NOR IN ANY MANNER DISCLOSED TO ANY THIRD PARTY WITHOUT CS/S / RHS/S PRIOR WRITTEN CONSENT. ALL RIGHTS OF DESIGN AND INVENTION ARE RESERVED.

NO	DATE	BY	REVISION DESCRIPTION
1	6/1/01	JT	As-Built
2			
3			
4			

FILE: Berwyn-asbuilt.vsd

DRAWING TYPE:

ALL DIMENSIONS TO BE FIELD VERIFIED BEFORE ORDERING AND/OR FABRICATION OF COMPONENTS

Control Solutions
631 E BUTTERFIELD ROAD
SUITE 314
LOMBARD IL
PHONE 630 852-1700
FAX 630 852-9030

DATE 6/9/00

ENGINEERED BY Krista Tapscott

DRAWN BY Krista Tapscott

APPROVED BY

DATE APPROVED

FINAL APPROVED FOR CONSTRUCTION

OWNER TITLE DATE

Control Solutions TITLE DATE

CUSTOMER NAME Berwyn Public Safety

LOCATION Berwyn, IL

DRAWING DESCRIPTION P-1:BOILER ROOM CONTROL PANEL

AS-BUILT COPY

P-1: CONTINUED

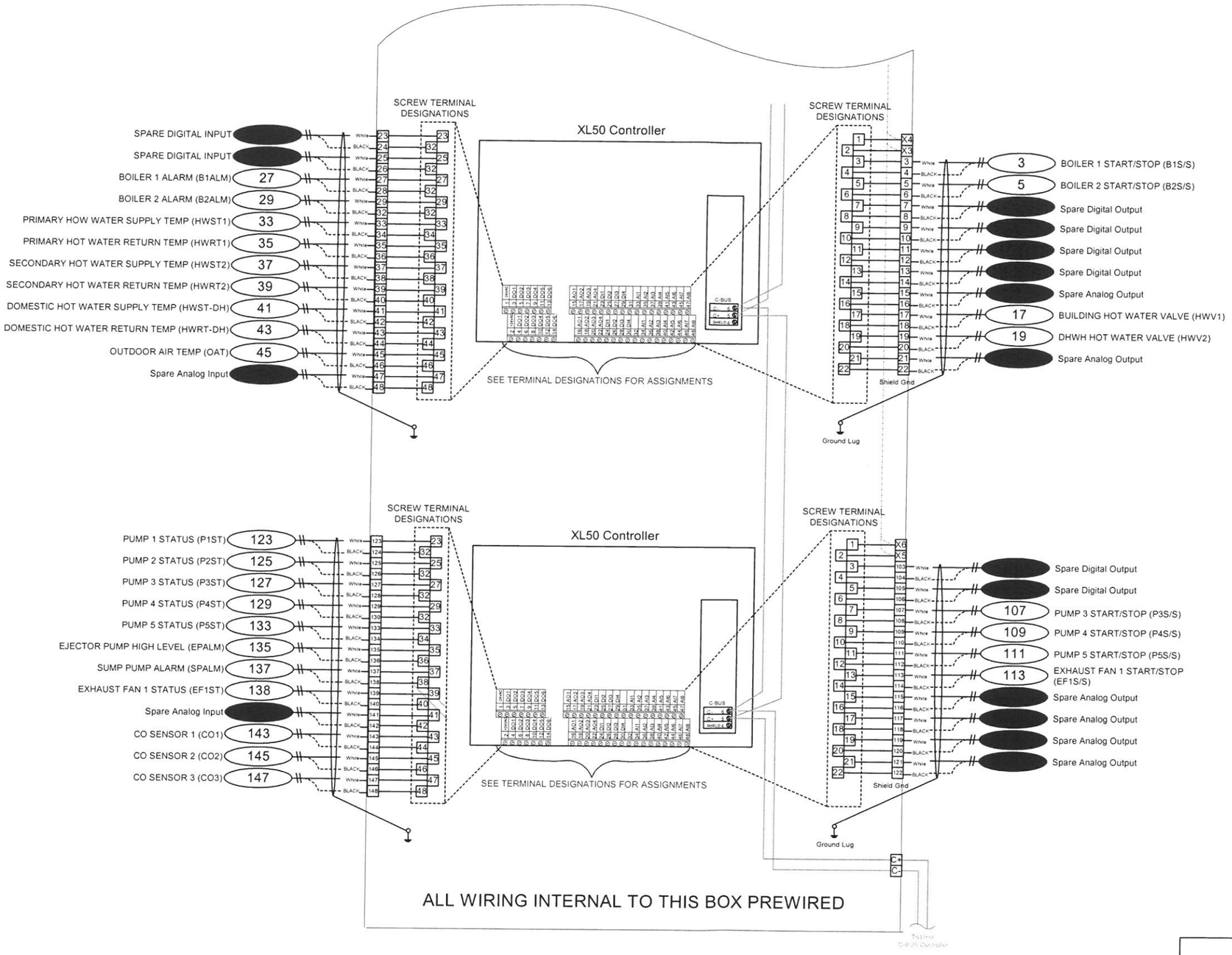

CONTROL SOLUTIONS / RICH HOUSH SERVICES INC.

PROPRIETARY PROPERTY

THIS DRAWING IS THE PROPRIETARY PROPERTY OF CONTROL SOLUTIONS / RICH HOUSH SERVICES INC. AND MUST NOT BE USED EXCEPT IN CONNECTION WITH OUR WORK, NOR IN ANY MANNER DISCLOSED TO ANY THIRD PARTY WITHOUT CSI'S / RHSI'S PRIOR WRITTEN CONSENT. ALL RIGHTS OF DESIGN AND INVENTION ARE RESERVED.

NO	DATE	BY	REVISION DESCRIPTION
1	6/1/01	JT	As-Built
2			
3			
4			

FILE: Berwyn-asbuilt.vsd

DRAWING TYPE:

ALL DIMENSIONS TO BE FIELD VERIFIED BEFORE ORDERING AND/OR FABRICATION OF COMPONENTS

Control Solutions
631 E BUTTERFIELD ROAD
SUITE 314
LOMBARD IL
PHONE 630 852-1700
FAX 630 852-0330

FINAL APPROVED FOR CONSTRUCTION

OWNER TITLE DATE

Control Solutions TITLE DATE

DATE	6/9/00
ENGINEERED BY	Krista Tapscott
DRAWN BY	Krista Tapscott
APPROVED BY	
DATE APPROVED	
CUSTOMER NAME	Berwyn Public Safety
LOCATION	Berwyn, IL
DRAWING DESCRIPTION	P-1: CONTINUED

AS-BUILT COPY

AHU-3, FIRING RANGE CONTROLS

FOR CONTROL PANEL SEE PAGE 903291-16
ALL WIRING TERMINATED AT CONTROL PANEL UNLESS NOTED

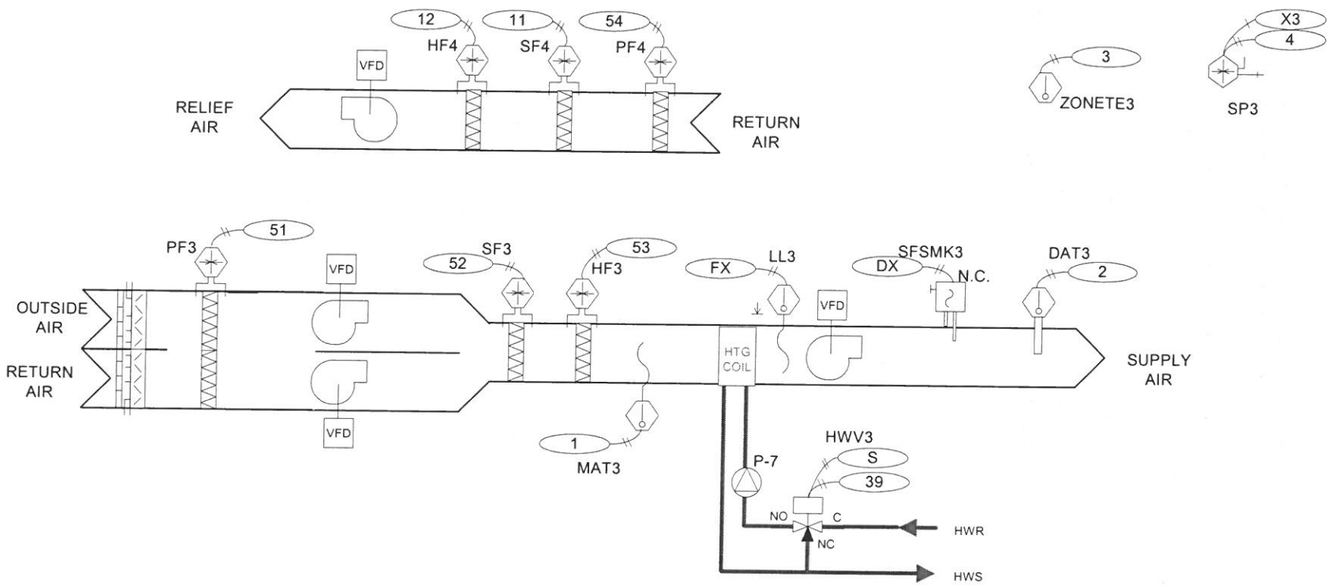

TAG	DESCRIPTION	TYPE	PART NUMBER	MFGR.	QTY.
ZONETE3	ZONE TEMPERATURE	AI	ACI/20K-NTC-SP	ACI	1
MAT3	MIXED AIR TEMPERATURE	AI	ACI/20K-NTC-A24'	ACI	1
DAT3	DISCHARGE AIR TEMPERATURE	AI	ACI/20K-NTC-D8"	ACI	1
LL3	LOW LIMIT SENSOR		CTE-3017	KMC	1
SP3	SPACE STATIC PRESSURE	AI	700D- +-2"-24V-12	AUTOTRAN	1
SFSMK3	DUCT SMOKE DETECTOR		SUPPLIED,POWERED, INSTALLED BY OTHERS		
HWV3	HOT WATER VALVE	AO	SEE VALVE SCHEDULE		
P7ST	PUMP 7 STATUS	DI	H-708	VERIS	1
P7S/S	PUMP 7 START/STOP	DO	RIBU1C	CORE	1
SFS/S3	SUPPLY FAN START/STOP	DO	RH1B-AC24/SH1B	IDEC	1
RCFS/S1	RECIRC FAN 1 START/STOP	DO	RH1B-AC24/SH1B	IDEC	1
RCFS/S2	RECIRC FAN 2 START/STOP	DO	RH1B-AC24/SH1B	IDEC	1
EFS/S4	EXHAUST FAN START/STOP	DO	RH1B-AC24/SH1B	IDEC	1
SFST3	SUPPLY FAN STATUS	DI	INTERLOCKED TO VFD		
RCFST1	RECIRC FAN 1 STATUS	DI	INTERLOCKED TO VFD		
RCFST2	RECIRC FAN 2 STATUS	DI	INTERLOCKED TO VFD		
EFST4	EXHAUST FAN STATUS	DI	INTERLOCKED TO VFD		
PF3	PRE FILTER - AHU-3	DI	AFS-222	CSI	1
SF3	SECONDARY FILTER - AHU-3	DI	AFS-222	CSI	1
HF3	HEPA FILTER - AHU-3	DI	AFS-222	CSI	1
PF4	PRE FILTER - AHU-4	DI	AFS-222	CSI	1
SF4	SECONDARY FILTER - AHU-4	DI	AFS-222	CSI	1
HF4	HEPA FILTER - AHU-4	DI	AFS-222	CSI	1

SEQUENCE OF OPERATIONS

AHU-3/4:

AHU-3/4 may be enabled/disabled by the wall mounted switch or by the BAS based upon a call for heating during occupied hours.

The pressurization system, provided by Paragon Controls, shall modulate the dampers and control the fan speed according to the Paragon Controls sequence. Once the system has been enabled, the BAS shall enable the fans. The BAS shall monitor the status on all fans.

On a call for heating, the BAS shall enable the system if it is not already running. The BAS shall next start the freeze pump, P-7, and shall modulate the hot water valve, HWV3, to maintain discharge air temperature setpoint.

The BAS shall monitor for a low limit alarm, supply smoke detector alarm, or pressurization system alarm. In the event of an alarm, the fans shall stop and the hot water coil valve shall go to full flow. The alarm shall be noted on the front end computer.

The BAS shall also monitor the Firing Range Room for room temperature, pressure differential, and all filter conditions.

VFD CONTROL PANEL

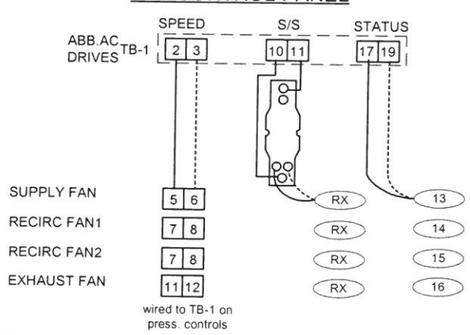

PUMP P-7 STARTER CIRCUIT

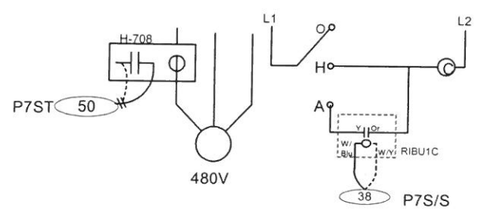

HWV3

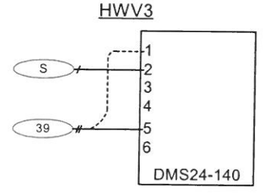

AHU-3 ENABLE WALL SWITCH

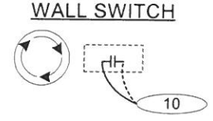

LOW LIMIT WIRING

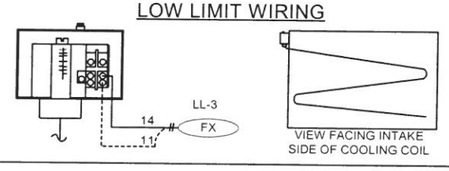

NOTES:

1. ALL PNEUMATIC TUBING TO BE 1/4" POLY

CONTROL SOLUTIONS / RICH HOUSH SERVICES INC.

PROPRIETARY PROPERTY

THIS DRAWING IS THE PROPRIETARY PROPERTY OF CONTROL SOLUTIONS / RICH HOUSH SERVICES INC. AND MUST NOT BE USED EXCEPT IN CONNECTION WITH OUR WORK, NOR IN ANY MANNER DISCLOSED TO ANY THIRD PARTY WITHOUT CS/S / RHS/S PRIOR WRITTEN CONSENT. ALL RIGHTS OF DESIGN AND INVENTION ARE RESERVED.

NO	DATE	BY	REVISION DESCRIPTION
1	6/1/01	JT	As-Built
2			
3			
4			

FILE: Berwyn-asbuilt.vsd

DRAWING TYPE:

ALL DIMENSIONS TO BE FIELD VERIFIED BEFORE ORDERING AND/OR FABRICATION OF COMPONENTS

Control Solutions
631 E BUTTERFIELD ROAD
SUITE 314
LOMBARD IL
PHONE 630 852-1700
FAX 630 852-9030

FINAL APPROVED FOR CONSTRUCTION

OWNER	TITLE	DATE
Control Solutions	TITLE	DATE

DATE	6/9/00
ENGINEERED BY	Krista Tapscott
DRAWN BY	Krista Tapscott
APPROVED BY	
DATE APPROVED	
CUSTOMER NAME	Berwyn Public Safety
LOCATION	Berwyn, IL
DRAWING DESCRIPTION	AHU-3, FIRING RANGE CONTROLS

AS-BUILT COPY

PRESSURIZATION CONTROLS

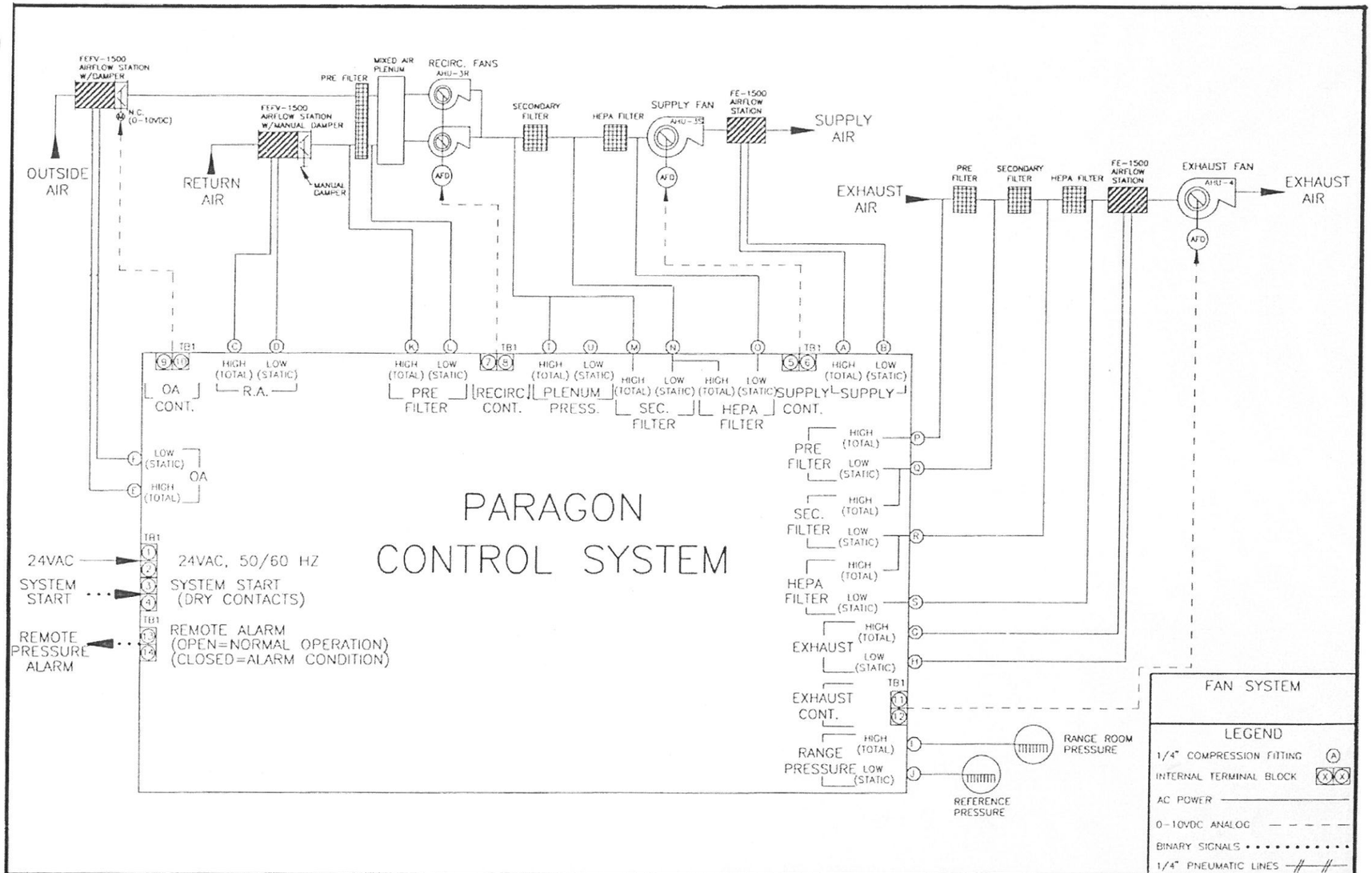

NOTE: Pressurization control system designed and submitted by Paragon Controls. For more detailed information and sequence on pressurization system, see Paragon's full submittal.

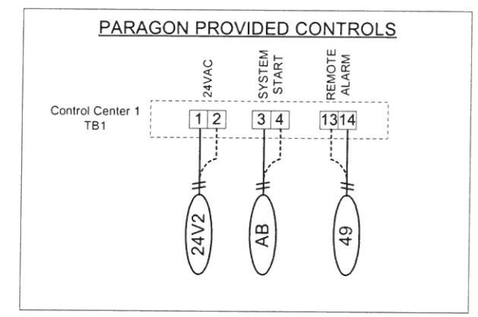

Paragon Controls Incorporated

TITLE: CONTROL SYSTEM INTERFACE DIAGRAMATIC		
PROJECT: BERWYN POLICE		
W.O.: 4599	DATE: 12/27/99	DWG. NO.: SYS-1-0

ALL DIMENSIONS TO BE FIELD VERIFIED BEFORE ORDERING AND/OR FABRICATION OF COMPONENTS

FINAL APPROVED FOR CONSTRUCTION

OWNER TITLE DATE

Control Solutions TITLE DATE

CONTROL SOLUTIONS / RICH HOUSH SERVICES INC.

PROPRIETARY PROPERTY

THIS DRAWING IS THE PROPRIETARY PROPERTY OF CONTROL SOLUTIONS / RICH HOUSH SERVICES INC. AND MUST NOT BE USED EXCEPT IN CONNECTION WITH OUR WORK, NOR IN ANY MANNER DISCLOSED TO ANY THIRD PARTY WITHOUT CSIS / RHSIS PRIOR WRITTEN CONSENT. ALL RIGHTS OF DESIGN AND INVENTION ARE RESERVED

NO.	DATE	BY	REVISION DESCRIPTION
1	6/1/01	JT	As-Built
2			
3			
4			

FILE: Berwyn-asbuilt.vsd

DRAWING TYPE:

Control Solutions
631 E BUTTERFIELD ROAD
SUITE 314
LOMBARD IL
PHONE 630 852-1700
FAX 630 852-9030

DATE	6/9/00
ENGINEERED BY	Krista Tapscott
DRAWN BY	Krista Tapscott
APPROVED BY	
DATE APPROVED	
CUSTOMER NAME	Berwyn Public Safety
LOCATION	Berwyn, IL
DRAWING DESCRIPTION	PRESSURIZATION CONTROLS

AS-BUILT COPY

PRESSURIZATION CONTROLS (2)

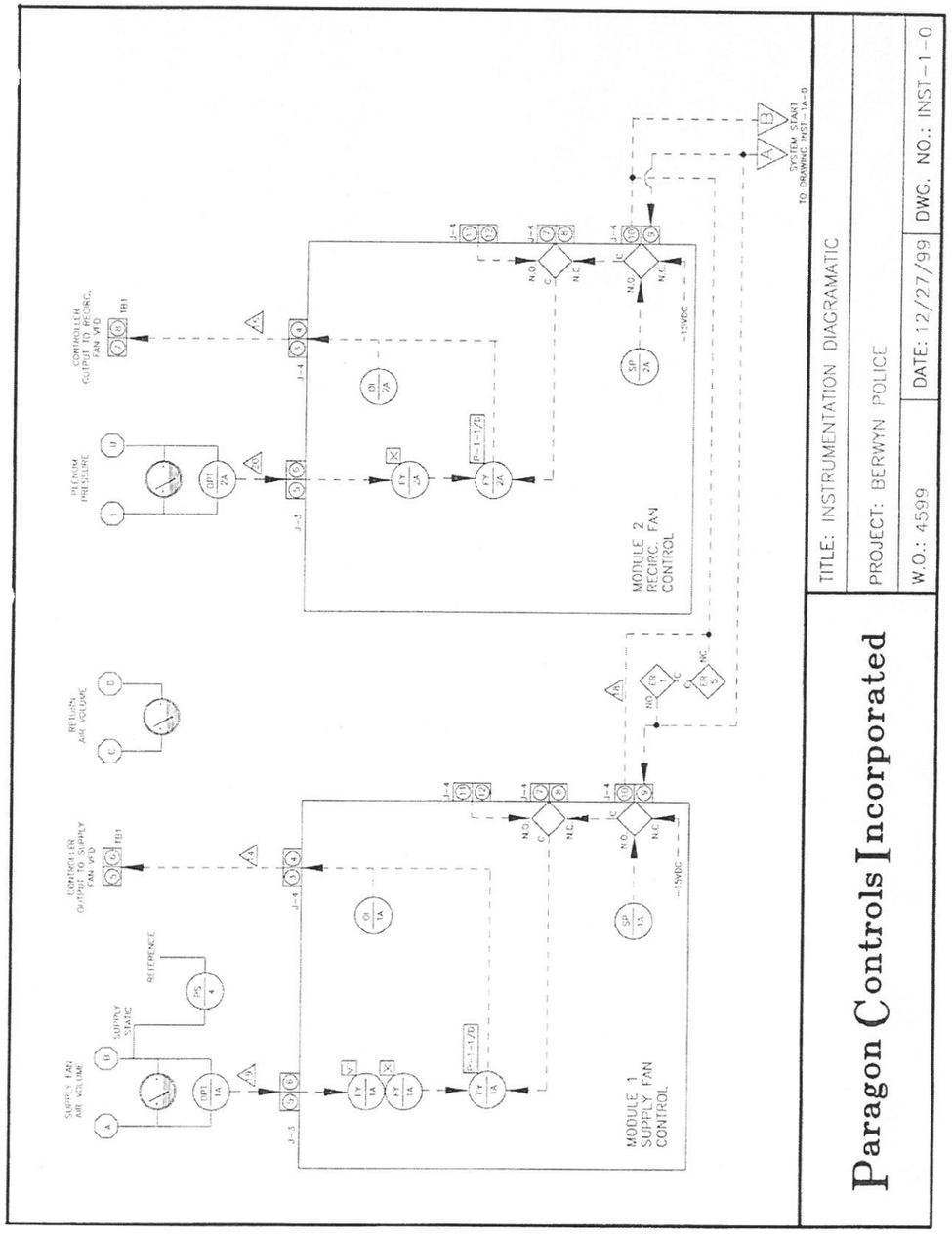

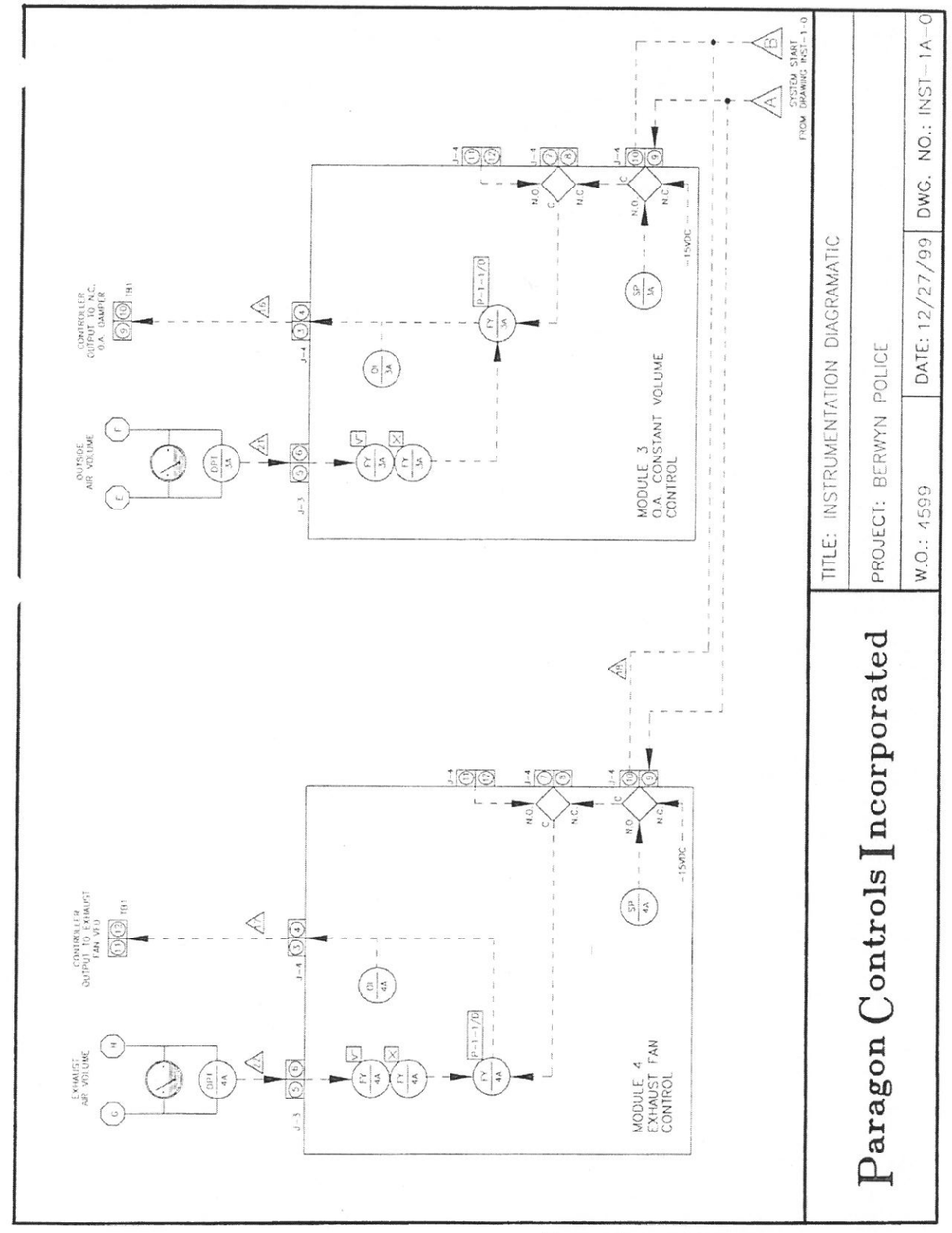

CONTROL SOLUTIONS / RICH HOUSH SERVICES INC.

PROPRIETARY PROPERTY

THIS DRAWING IS THE PROPRIETARY PROPERTY OF CONTROL SOLUTIONS / RICH HOUSH SERVICES INC. AND MUST NOT BE USED EXCEPT IN CONNECTION WITH OUR WORK, NOR IN ANY MANNER DISCLOSED TO ANY THIRD PARTY WITHOUT CSI'S / RHS'S PRIOR WRITTEN CONSENT. ALL RIGHTS OF DESIGN AND INVENTION ARE RESERVED.

NO.	DATE	BY	REVISION DESCRIPTION
1	6/1/01	JT	As-Built
2			
3			
4			

FILE: Berwyn-asbuilt.vsd

DRAWING TYPE:

ALL DIMENSIONS TO BE FIELD VERIFIED BEFORE ORDERING AND/OR FABRICATION OF COMPONENTS

Control Solutions
631 E BUTTERFIELD ROAD
SUITE 314
LOMBARD IL
PHONE 630.852-1700
FAX 630.852-0030

DATE	6/9/00
ENGINEERED BY	Krista Tapscott
DRAWN BY	Krista Tapscott
APPROVED BY	
DATE APPROVED	

FINAL APPROVED FOR CONSTRUCTION

OWNER	TITLE	DATE
Control Solutions	TITLE	DATE

CUSTOMER NAME	Berwyn Public Safety
LOCATION	Berwyn, IL
DRAWING DESCRIPTION	PRESSURIZATION CONTROLS (2)

AS-BUILT COPY

PRESSURIZATION CONTROLS (3)

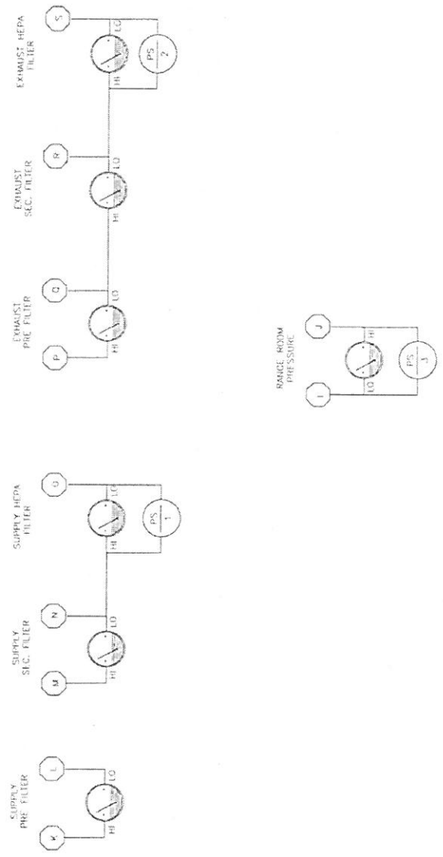

TITLE: INSTRUMENTATION DIAGRAMATIC

PROJECT: BRWYN POLICE

W.O.: 4599 | DATE: 12/27/99 | DWG. NO.:INST-1B-0

Paragon Controls Incorporated

FIELD CONNECTION CODE

CONTROL CENTER 1

TERMINAL TB1 INPUT POWER & SIGNAL INTERFACE

Terminals	Function
1, 2	24VAC / 50 TO 60 HZ
3, 4	SYSTEM START (DRY CONTACTS) CLOSED = ENABLE OPEN = DISABLE
5, 6	SUPPLY FAN CONTROLLER OUTPUT (0-10VDC)
7, 8	RECIRC. FAN CONTROLLER OUTPUT (0-10VDC)
9, 10	OUTSIDE AIR DAMPER CONTROLLER OUTPUT (0-10VDC)
11, 12	EXHAUST FAN CONTROLLER OUTPUT (0-10VDC)
13, 14	REMOTE RANGE PRESSURE ALARM CLOSED = ALARM CONDITION OPEN = NORMAL OPERATION

1/4" PNEUMATIC BULKHEAD COMPRESSION FITTING

- A — TOTAL PRESSURE (HIGH)
- B — SUPPLY FAN AIR VOLUME STATIC PRESSURE (LOW)
- C — TOTAL PRESSURE (HIGH)
- D — RETURN AIR VOLUME STATIC PRESSURE (LOW)
- E — TOTAL PRESSURE (HIGH)
- F — OUTSIDE AIR VOLUME STATIC PRESSURE (LOW)
- G — TOTAL PRESSURE (HIGH)
- H — EXHAUST FAN AIR VOLUME STATIC PRESSURE (LOW)
- I — RANGE ROOM PRESSURE
- J — REFERENCE PRESSURE
- K — TOTAL PRESSURE (HIGH)
- L — SUPPLY PRE FILTER STATIC PRESSURE (LOW)
- M — TOTAL PRESSURE (HIGH)
- N — SUPPLY SECONDARY FILTER STATIC PRESSURE (LOW)
- O — HEPA FILTER (LOW)
- P — TOTAL PRESSURE (HIGH)
- Q — EXHAUST PRE FILTER STATIC PRESSURE (LOW)
- R — TOTAL PRESSURE (HIGH)
- S — EXHAUST HEPA FILTER STATIC PRESSURE (LOW)
- T — TOTAL PRESSURE (HIGH)
- U — PLENUM PRESSURE STATIC PRESSURE (LOW)

TITLE: FIELD CONNECTION CODE

PROJECT: BERWYN POLICE

W.O.: 4599 | DATE: 12/27/99 | DWG. NO.: FCC-1-0

Paragon Controls Incorporated

CONTROL SOLUTIONS / RICH HOUSH SERVICES INC.

PROPRIETARY PROPERTY

THIS DRAWING IS THE PROPRIETARY PROPERTY OF CONTROL SOLUTIONS / RICH HOUSH SERVICES INC. AND MUST NOT BE USED EXCEPT IN CONNECTION WITH OUR WORK, NOR IN ANY MANNER DISCLOSED TO ANY THIRD PARTY WITHOUT CS'S / RHS'S PRIOR WRITTEN CONSENT. ALL RIGHTS OF DESIGN AND INVENTION ARE RESERVED.

NO.	DATE	BY	REVISION DESCRIPTION
1	6/1/01	JT	As-Built
2			
3			
4			

FILE: Berwyn-asbuilt.vsd

DRAWING TYPE:

ALL DIMENSIONS TO BE FIELD VERIFIED BEFORE ORDERING AND/OR FABRICATION OF COMPONENTS

Control Solutions
631 E BUTTERFIELD ROAD
SUITE 314
LOMBARD IL
PHONE 630 652-1700
FAX 630 652-9030

FINAL APPROVED FOR CONSTRUCTION

OWNER TITLE DATE

Control Solutions TITLE DATE

DATE	6/9/00
ENGINEERED BY	Krista Tapscott
DRAWN BY	Krista Tapscott
APPROVED BY	
DATE APPROVED	
CUSTOMER NAME	Berwyn Public Safety
LOCATION	Berwyn, IL
DRAWING DESCRIPTION	PRESSURIZATION CONTROLS (3)

AS-BUILT COPY

P-2: AHU-3 CONTROL PANEL

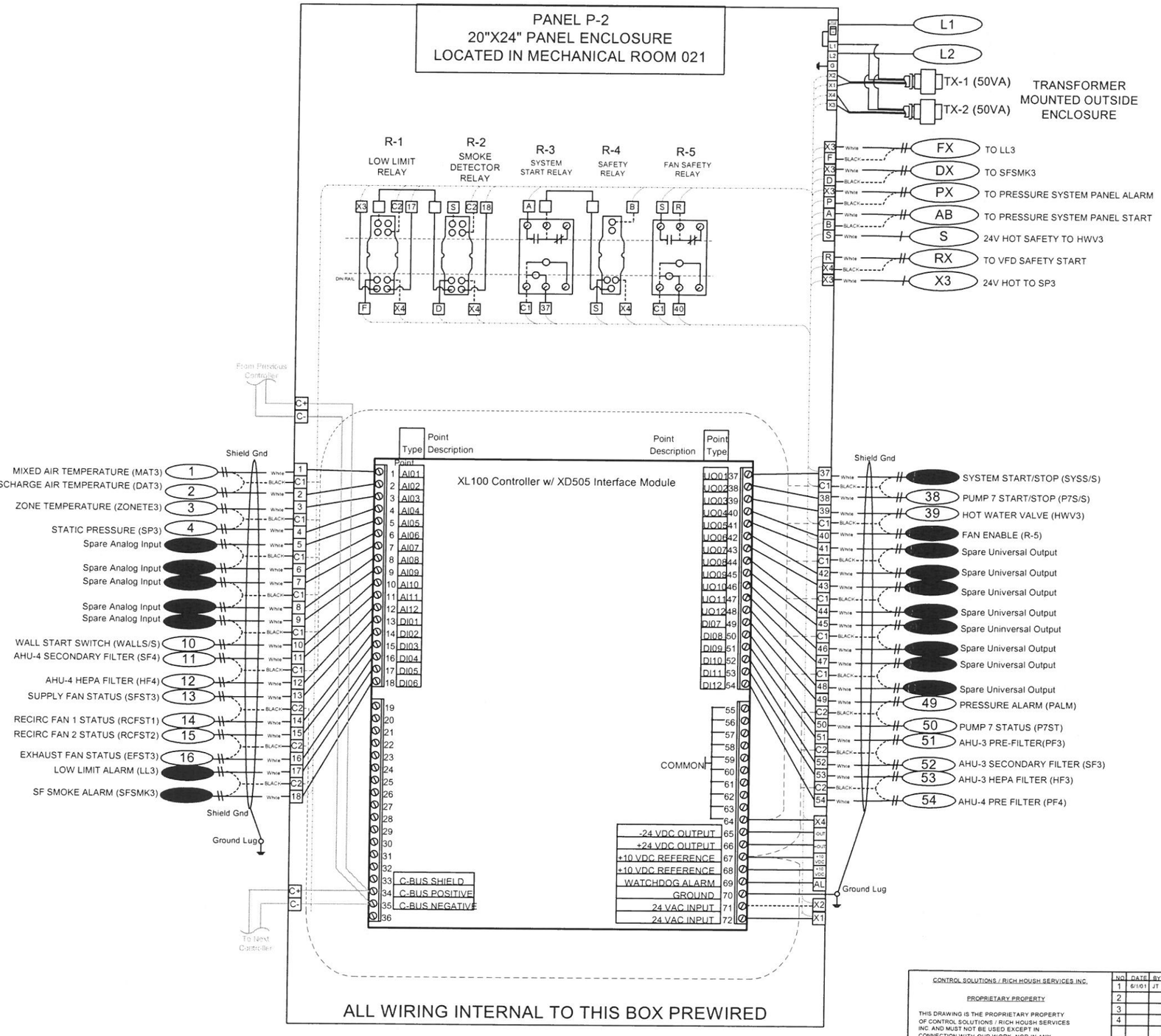

TAG	DESCRIPTION	TYPE	PART NUMBER	MFGR.	QTY.
C-1	CONTROLLER		XL100B	HONEYWELL	1
SM-1	SUBMODULE		XD505A	HONEYWELL	1
R-1	LOW LIMIT RELAY	DI	RH2B-AC4/SH1B	IDEC	1
R-2	SMOKE RELAY	DI	RH2B-AC4/SH1B	IDEC	1
R-3	SYSTEM START RELAY	DO	MU1C	CORE	1
R-4	SAFETY RELAY		RH1B-AC24/SH1B	IDEC	1
R-5	FAN SAFETY RELAY	DO	MU1C	CORE	1
TX-1	TRANSFORMER-CONTROLLER		MUC-024-050-TF-CB	CORE	1
TX-2	TRANSFORMER-FIELD		MUC-024-050-TF-CB	CORE	1
P-2	20 X 24 X 8 ENCLOSURE		AM0605020	GRAYBAR	1
	20 X 24 BACKPLATE		AMPZ06050	GRAYBAR	1
	KEYED LOCK		AMFL2844	GRAYBAR	1

CONTROL SOLUTIONS / RICH HOUSH SERVICES INC.

PROPRIETARY PROPERTY

THIS DRAWING IS THE PROPRIETARY PROPERTY OF CONTROL SOLUTIONS / RICH HOUSH SERVICES INC. AND MUST NOT BE USED EXCEPT IN CONNECTION WITH OUR WORK, NOR IN ANY MANNER DISCLOSED TO ANY THIRD PARTY WITHOUT CS/S / RHS/S PRIOR WRITTEN CONSENT. ALL RIGHTS OF DESIGN AND INVENTION ARE RESERVED

NO.	DATE	BY	REVISION DESCRIPTION
1	6/1/01	JT	As-Built
2			
3			
4			

FILE: Berwyn-asbuilt.vsd

DRAWING TYPE:

ALL DIMENSIONS TO BE FIELD VERIFIED BEFORE ORDERING AND/OR FABRICATION OF COMPONENTS

Control Solutions
631 E BUTTERFIELD ROAD
SUITE 314
LOMBARD IL
PHONE 630 852-1700
FAX 630 852-0030

FINAL APPROVED FOR CONSTRUCTION

OWNER TITLE DATE

Control Solutions TITLE DATE

DATE	6/9/00
ENGINEERED BY	Krista Tapscott
DRAWN BY	Krista Tapscott
APPROVED BY	
DATE APPROVED	
CUSTOMER NAME	Berwyn Public Safety
LOCATION	Berwyn, IL
DRAWING DESCRIPTION	P-2: AHU-3 CONTROL PANEL

AS-BUILT COPY

EXHAUST FANS, ISO VALVES

FOR CONTROL PANEL SEE PAGE 903291-11
ALL WIRING TERMINATED AT CONTROL PANEL UNLESS NOTED

TAG	DESCRIPTION	TYPE	PART NUMBER	MFGR.	QTY.
EF2ST	EXHAUST FAN 2 STATUS	DI	H-930	VERIS	1
EF2SS	EXHAUST FAN 2 START	DO			1
EF3ST	EXHAUST FAN 3 STATUS	DI	H-930	VERIS	1
EF3SS	EXHAUST FAN 3 START	DO			1
EF4ST	EXHAUST FAN 4 STATUS	DI	H-930	VERIS	1
EF4SS	EXHAUST FAN 4 START	DO			1
EF5ST	EXHAUST FAN 5 STATUS	DI	H-930	VERIS	1
EF5SS	EXHAUST FAN 5 START	DO			1
EF6ST	EHXUAST FAN 6 STATUS	DI	H-930	VERIS	1
EF6SS	EXHAUST FAN 6 START	DO			1
GF1ST	GARAGE FAN 1 STATUS	DI	H-930	VERIS	1
GF1SS	GARAGE FAN 1 START	DO			1
GF2ST	GARAGE FAN 2 STATUS	DI	H-930	VERIS	1
GF2SS	GARAGE FAN 2 START	DO			1
GF3ST	GARAGE FAN 3 STATUS	DI	H-930	VERIS	1
GF3SS	GARAGE FAN 3 START	DO			1
ISO1	ISOLATION VALVE 1		SEE VALVE SCHEDULE		
ISO2	ISOLATION VALVE 2		SEE VALVE SCHEDULE		

EF-2,3,4,5,6 STARTER CIRCUIT

POWER SOURCED FROM ELECTRICAL PANEL LPG-1

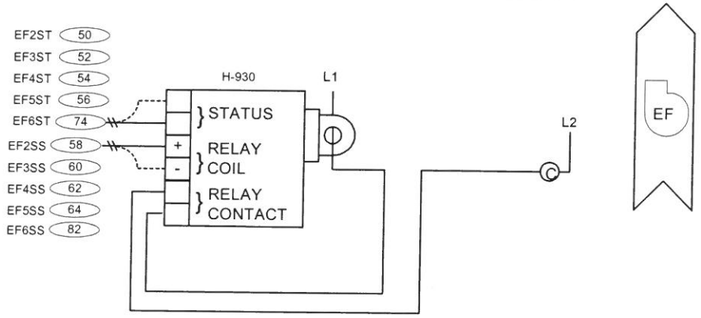

ISOLATION VALVES 1 and 2

SERVES AHU-3

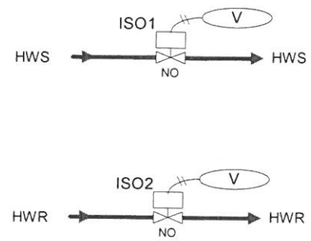

GARAGE EXHAUST GF-1,2,3

POWER SOURCED FROM ELECTRICAL PANEL LPG-1

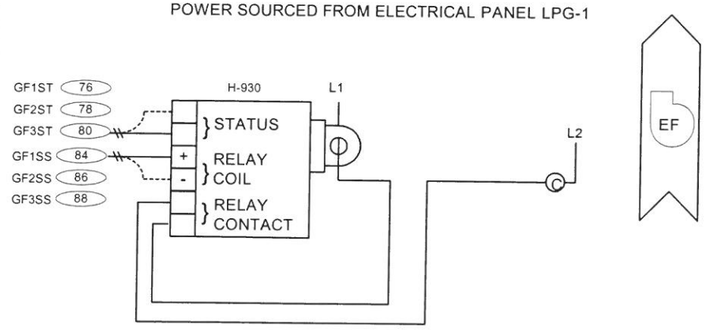

SEQUENCE OF OPERATIONS

EXHAUST FANS 2 to 6: Exhaust fans 2 through 6 shall be started and stopped by the BAS based upon the occupied/unoccupied schedule. The status for each fan shall be monitored by the BAS.
In fire alarm mode, the exhaust fans shall stop. The system shall resume normal operation when the alarm system has been manually reset.

GARAGE EXHAUST FANS: GF-1,2, and 3. The BAS shall monitor the CO level in each of the garage stalls. When the CO level reaches or exceeds 50 PPM for 8 hours continuously or the CO level reaches or exceeds 400 PPM for 12 minutes continuously, the garage exhaust fan shall start. The garage exhaust fan shall be on to maintain the CO below the standard level (adj.). If the CO level is still above 400 PPM after running the exhaust fan for three minutes, an alarm shall sound.

ISOLATION VALVES: The normally open isolation valves shall remain open during heating season, and close during cooling season.

CONTROL SOLUTIONS / RICH HOUSH SERVICES INC.

PROPRIETARY PROPERTY

THIS DRAWING IS THE PROPRIETARY PROPERTY OF CONTROL SOLUTIONS / RICH HOUSH SERVICES INC. AND MUST NOT BE USED EXCEPT IN CONNECTION WITH OUR WORK, NOR IN ANY MANNER DISCLOSED TO ANY THIRD PARTY WITHOUT CSI'S / RHSI'S PRIOR WRITTEN CONSENT. ALL RIGHTS OF DESIGN AND INVENTION ARE RESERVED.

NO	DATE	BY	REVISION DESCRIPTION
1	6/1/01	JT	As-Built
2			
3			
4			

FILE: Berwyn-asbuilt.vsd

DRAWING TYPE:

ALL DIMENSIONS TO BE FIELD VERIFIED BEFORE ORDERING AND/OR FABRICATION OF COMPONENTS

Control Solutions
631 E BUTTERFIELD ROAD
SUITE 314
LOMBARD IL
PHONE 630 852-1700
FAX 630 852-8030

DATE: 6/9/00
ENGINEERED BY: Krista Tapscott
DRAWN BY: Krista Tapscott
APPROVED BY:
DATE APPROVED:

FINAL APPROVED FOR CONSTRUCTION

OWNER TITLE DATE

Control Solutions TITLE DATE

CUSTOMER NAME: Berwyn Public Safety
LOCATION: Berwyn, IL
DRAWING DESCRIPTION: EXHAUST FANS, ISO VALVES

AS-BUILT COPY

P-3: EXHAUST FAN CONTROL PANEL

TAG	DESCRIPTION	TYPE	PART NUMBER	MFGR.	QTY.
C-1	REMOTE I/O CONTROLLER		W7761A2002	HONEYWELL	1
C-2	REMOTE I/O CONTROLLER		W7761A2002	HONEYWELL	1
R-1	ISO VALVE RELAY	DO	RH1B-AC24/SH1B	IDEC	1
TX-1	TRANSFORMER-CONTROLLER		MUC-024-050-TF-CB	CORE	1
TX-2	TRANSFORMER-FIELD		MUC-024-050-TF-CB	CORE	1
P-3	20 X 24 X 8 ENCLOSURE		AM0605020	GRAYBAR	1
	20 X 24 BACKPLATE		AMPZ06050	GRAYBAR	1
	KEYED LOCK		AMFL2844	GRAYBAR	1

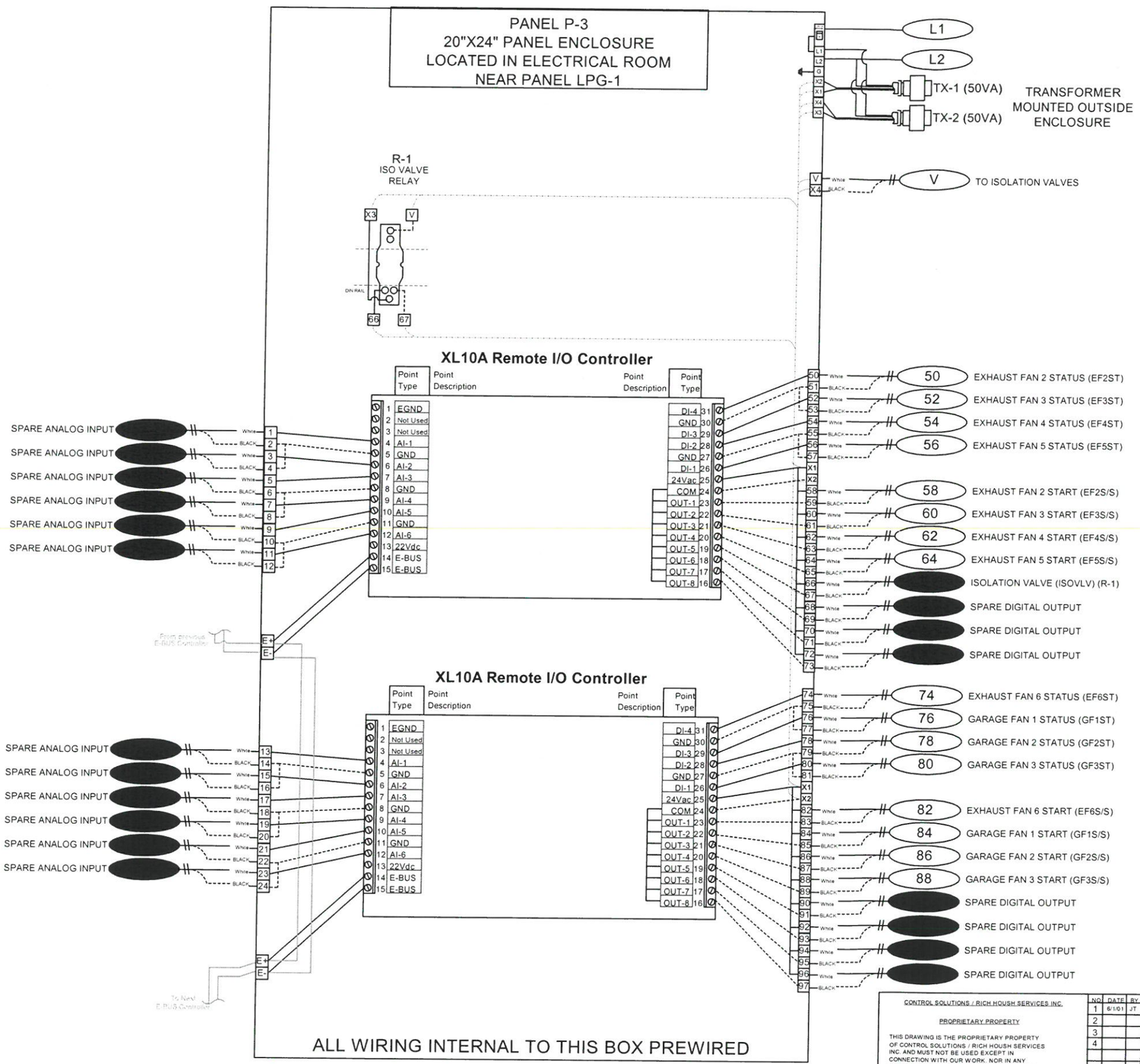

ALL DIMENSIONS TO BE FIELD VERIFIED BEFORE ORDERING AND/OR FABRICATION OF COMPONENTS

FINAL APPROVED FOR CONSTRUCTION

OWNER TITLE DATE

Control Solutions TITLE DATE

CONTROL SOLUTIONS / RICH HOUSH SERVICES INC.

PROPRIETARY PROPERTY

THIS DRAWING IS THE PROPRIETARY PROPERTY OF CONTROL SOLUTIONS / RICH HOUSH SERVICES INC. AND MUST NOT BE USED EXCEPT IN CONNECTION WITH OUR WORK, NOR IN ANY MANNER DISCLOSED TO ANY THIRD PARTY WITHOUT CSI'S / RHSI'S PRIOR WRITTEN CONSENT. ALL RIGHTS OF DESIGN AND INVENTION ARE RESERVED.

NO.	DATE	BY	REVISION DESCRIPTION
1	6/1/01	JT	As-Built
2			
3			
4			

FILE: Berwyn-asbuilt.vsd

DRAWING TYPE:

Control Solutions

631 E BUTTERFIELD ROAD
SUITE 314
LOMBARD IL
PHONE 630 852-1700
FAX 630 852-0030

DATE 6/9/00

ENGINEERED BY Krista Tapscott

DRAWN BY Krista Tapscott

APPROVED BY

DATE APPROVED

CUSTOMER NAME Berwyn Public Safety

LOCATION Berwyn, IL

DRAWING DESCRIPTION P-3: EXHAUST FAN CONTROL PANEL

AS-BUILT COPY

EDH, VAV0-2 HUMIDITY, ISO VALVE

FOR CONTROL PANEL SEE PAGE 903291-18
ALL WIRING TERMINATED AT CONTROLLER UNLESS NOTED

TAG	DESCRIPTION	TYPE	PART NUMBER	MFGR.	QTY.
ISO3	ISOLATION VALVE 3		SEE VALVE SCHEDULE		
ISO4	ISOLATION VALVE 4		SEE VALVE SCHEDULE		
EDH-RT	EDH ROOM TEMP	AI	ACI/20K-NTC-SP	ACI	1
EDHS/S	EDH START/STOP	DO	RH1B-AC24/SH1B	IDEC	1
EDHST	EDH STATUS	DI	INTERLOCKED TO PANEL		
HUM0-2	VAV 0-2 SPACE HUMIDITY	AI	ACI/RH5-R	ACI	1

SEQUENCE OF OPERATIONS

Electric Duct Heater:
The BAS shall enable/disable the electric duct heater based upon room temperature, as well as monitoring the heater's status..

Isolation Valves:
The isolation valves shall remain open during heating season and closed during cooling season.

ELECTRIC DUCT HEATER
Located near Room 003

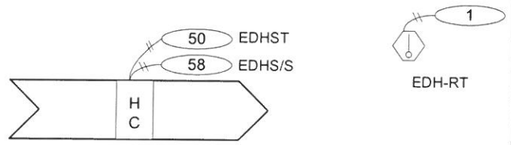

VAV 0-2 SPACE HUMIDITY
Located in Room 004

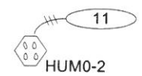

ISOLATION VALVES 3 and 4
SERVES CH-3, BB-1,6,7

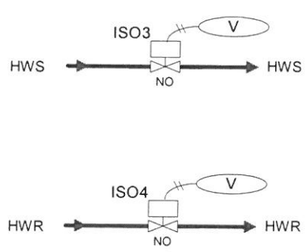

CONTROL SOLUTIONS / RICH HOUSH SERVICES INC.

PROPRIETARY PROPERTY

THIS DRAWING IS THE PROPRIETARY PROPERTY OF CONTROL SOLUTIONS / RICH HOUSH SERVICES INC. AND MUST NOT BE USED EXCEPT IN CONNECTION WITH OUR WORK, NOR IN ANY MANNER DISCLOSED TO ANY THIRD PARTY WITHOUT CSI'S / RHSI'S PRIOR WRITTEN CONSENT. ALL RIGHTS OF DESIGN AND INVENTION ARE RESERVED.

NO	DATE	BY	REVISION DESCRIPTION
1	6/1/01	JT	As-Built
2			
3			
4			

FILE: Berwyn-asbuilt.vsd
DRAWING TYPE:

ALL DIMENSIONS TO BE FIELD VERIFIED BEFORE ORDERING AND/OR FABRICATION OF COMPONENTS

Control Solutions
631 E BUTTERFIELD ROAD
SUITE 314
LOMBARD IL
PHONE 630 952-1700
FAX 630 952-9030

DATE 6/9/00
ENGINEERED BY Krista Tapscott
DRAWN BY Krista Tapscott
APPROVED BY
DATE APPROVED

FINAL APPROVED FOR CONSTRUCTION
OWNER TITLE DATE
Control Solutions TITLE DATE

CUSTOMER NAME Berwyn Public Safety
LOCATION Berwyn, IL
DRAWING DESCRIPTION EDH, VAV0-2 HUMIDITY, ISO VALVE

AS-BUILT COPY

P-4: EDH, VAV0-2 HUM PANEL

TAG	DESCRIPTION	TYPE	PART NUMBER	MFGR.	QTY.
C-1	REMOTE I/O CONTROLLER		W7761A2002	HONEYWELL	1
R-1	ISO VALVE RELAY	DO	RH1B-AC24/SH1B	IDEC	1
TX-1	TRANSFORMER-CONTROLLER		MUC-024-050-TF-CB	CORE	1
P-4	16 X 20 X 8 ENCLOSURE		AM0504020	GRAYBAR	1
	16 X 20 BACKPLATE		AMPZ05040	GRAYBAR	1
	KEYED LOCK		AMFL2844	GRAYBAR	1

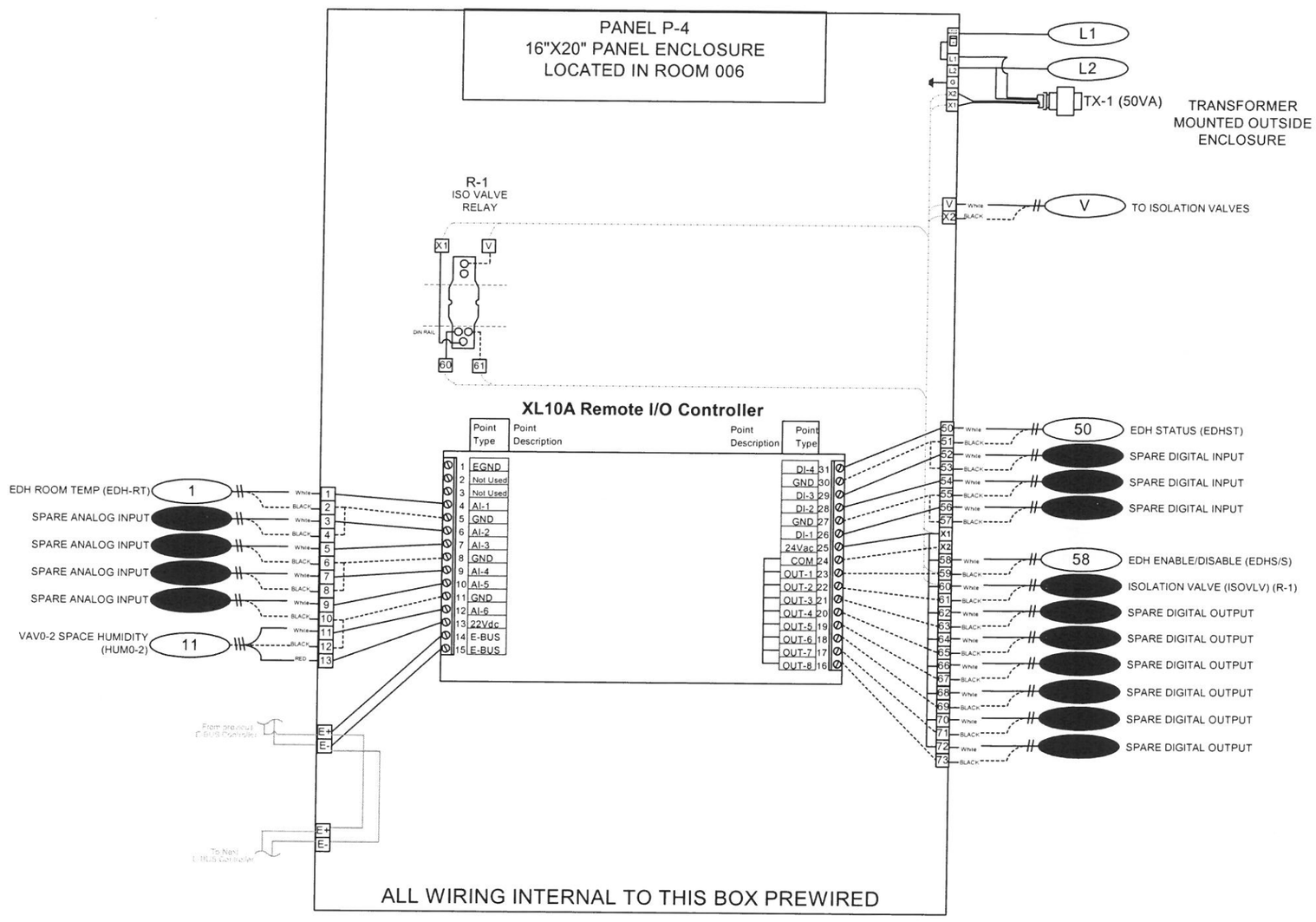

ALL DIMENSIONS TO BE FIELD VERIFIED BEFORE ORDERING AND/OR FABRICATION OF COMPONENTS

FINAL APPROVED FOR CONSTRUCTION

OWNER TITLE DATE

Control Solutions TITLE DATE

CONTROL SOLUTIONS / RICH HOUSH SERVICES INC.

PROPRIETARY PROPERTY

THIS DRAWING IS THE PROPRIETARY PROPERTY OF CONTROL SOLUTIONS / RICH HOUSH SERVICES INC. AND MUST NOT BE USED EXCEPT IN CONNECTION WITH OUR WORK, NOR IN ANY MANNER DISCLOSED TO ANY THIRD PARTY WITHOUT CSI'S / RHS'S PRIOR WRITTEN CONSENT. ALL RIGHTS OF DESIGN AND INVENTION ARE RESERVED.

NO.	DATE	BY	REVISION DESCRIPTION
1	6/10/1	JT	As-Built
2			
3			
4			

FILE: Berwyn-asbuilt.vsd

DRAWING TYPE:

Control Solutions
631 E BUTTERFIELD ROAD
SUITE 314
LOMBARD IL
PHONE 630.852-1700
FAX 630.852.9030

DATE 6/9/00

ENGINEERED BY Krista Tapscott

DRAWN BY Krista Tapscott

APPROVED BY

DATE APPROVED

CUSTOMER NAME Berwyn Public Safety

LOCATION Berwyn, IL

DRAWING DESCRIPTION P-4: EDH, VAV0-2 HUM PANEL

AS-BUILT COPY

AHU-2, RF-1, ISO VALVES, FIRE

FOR CONTROL PANEL SEE PAGE 903291-20
ALL WIRING TERMINATED AT CONTROL PANEL UNLESS NOTED

TAG	DESCRIPTION	TYPE	PART NUMBER	MFGR.	QTY.
HUM1-8	VAV1-8 SPACE HUMIDITY	AI	ACI/RH5-R	ACI	1
ZONETE2	AHU-2 ZONE TEMP	AI	ACI/20K-NTC-SP	ACI	1
ALARM2	AHU-2 ALARM	DI	RH1B-AC24/SH1B	IDEC	1
AHU2S/S	AHU-2 ENABLE/DISABLE	DO	INTERLOCKED TO PANEL		
ISO3	ISOLATION VALVE 3		SEE VALVE SCHEDULE		
ISO4	ISOLATION VALVE 4		SEE VALVE SCHEDULE		
ISO5-10	ISOLATION VALVES		SEE VALVE SCHEDULE		
FAD	FRESH AIR INTAKE DAMPER	DO	SEE DAMPER SCHEDULE		
FIRE	FIRE ALARM STATUS	DI	INTERLOCKED TO PANEL		

SEQUENCE OF OPERATIONS

Isolation Valves:
The isolation valves shall remain open during heating season and closed during cooling season.

AHU-2:
The unit shall be enabled/disabled by the BAS based on the occupied/unoccupied schedule. The BAS shall monitor unit alarm and room temperature.

Fresh Air Intake Damper:
The damper shall open when AHU-2 is running.

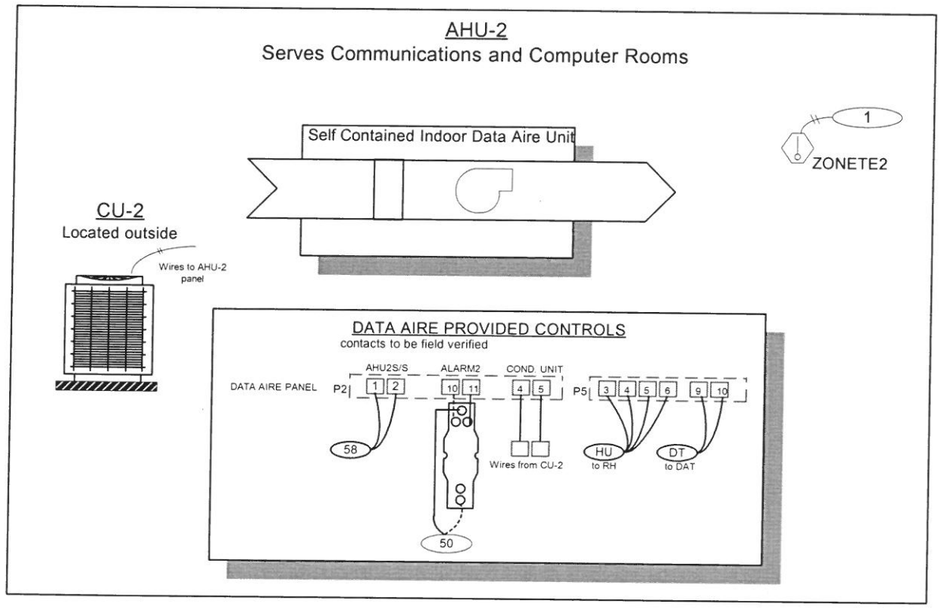

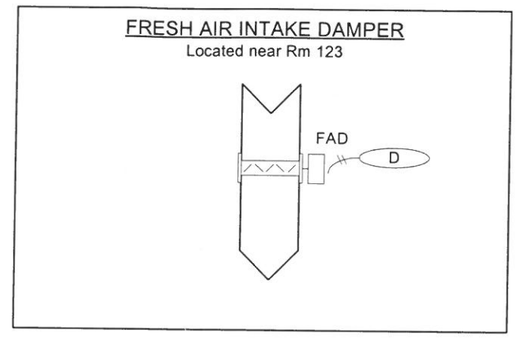

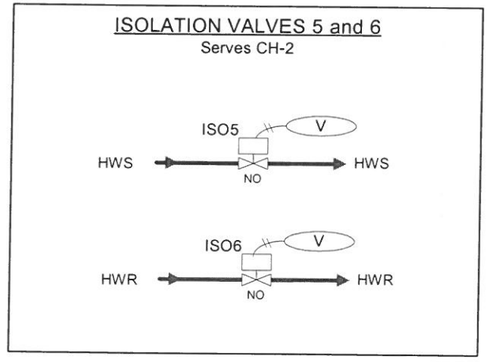

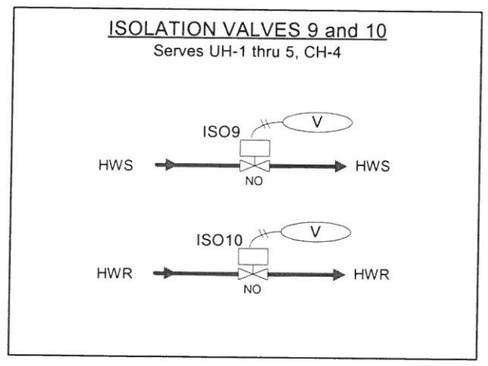

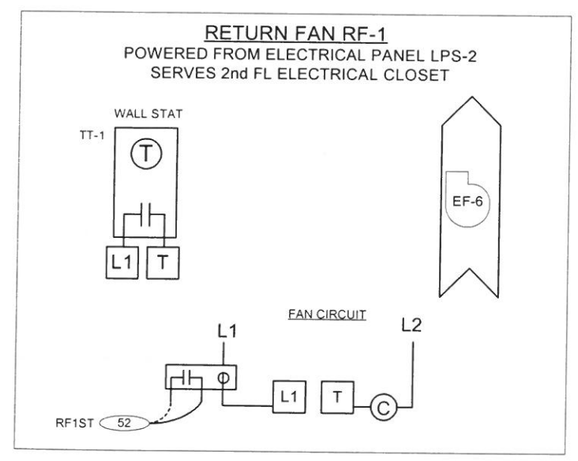

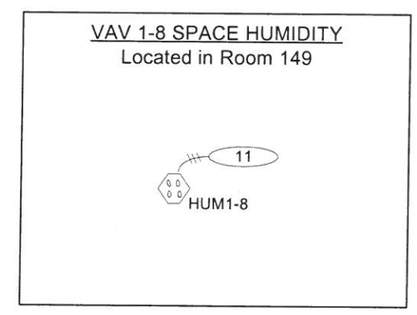

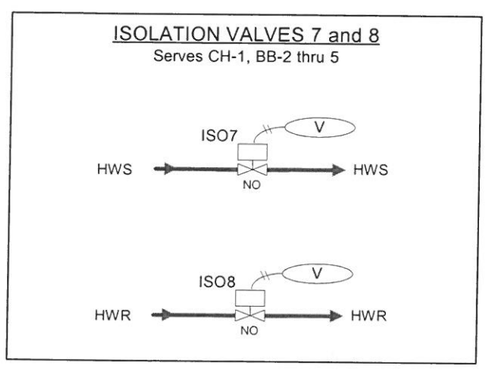

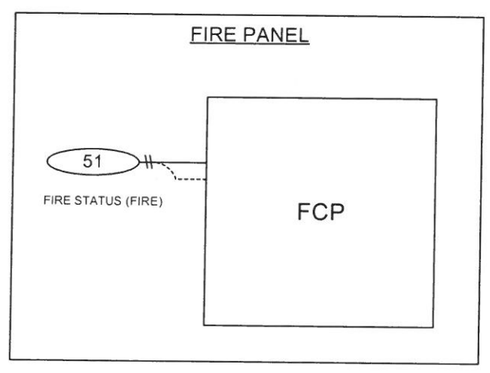

CONTROL SOLUTIONS / RICH HOUSH SERVICES INC.

PROPRIETARY PROPERTY

THIS DRAWING IS THE PROPRIETARY PROPERTY OF CONTROL SOLUTIONS / RICH HOUSH SERVICES INC. AND MUST NOT BE USED EXCEPT IN CONNECTION WITH OUR WORK, NOR IN ANY MANNER DISCLOSED TO ANY THIRD PARTY WITHOUT CSI'S / RHS'S PRIOR WRITTEN CONSENT. ALL RIGHTS OF DESIGN AND INVENTION ARE RESERVED.

NO	DATE	BY	REVISION DESCRIPTION
1	6/1/01	JT	As-Built
2			
3			
4			

FILE: Berwyn-asbuilt.vsd
DRAWING TYPE:

ALL DIMENSIONS TO BE FIELD VERIFIED BEFORE ORDERING AND/OR FABRICATION OF COMPONENTS

Control Solutions
631 E BUTTERFIELD ROAD
SUITE 314
LOMBARD IL
PHONE 630 952-1700
FAX 630 952-9030

FINAL APPROVED FOR CONSTRUCTION

OWNER	TITLE	DATE
Control Solutions	TITLE	DATE

DATE	6/9/00
ENGINEERED BY	Krista Tapscott
DRAWN BY	Krista Tapscott
APPROVED BY	
DATE APPROVED	
CUSTOMER NAME	Berwyn Public Safety
LOCATION	Berwyn, IL
DRAWING DESCRIPTION	AHU-2, RF-1, ISO VALVES, FIRE

AS-BUILT COPY

P-5: AHU-2, FIRE, ISO VLV PANEL

TAG	DESCRIPTION	TYPE	PART NUMBER	MFGR.	QTY.
C-1	REMOTE I/O CONTROLLER		W7761A2002	HONEYWELL	1
R-1	ISO VALVE RELAY	DO	RH1B-AC24/SH1B	IDEC	1
R-2	FRESH AIR DAMPER RELAY	DO	RH1B-AC24/SH1B	IDEC	1
TX-1	TRANSFORMER-CONTROLLER		MUC-024-050-TF-CB	CORE	1
TX-2	TRANSFORMER-FIELD		MUC-024-100-TF-CB	CORE	1
P-5	16 X 20 X 8 ENCLOSURE		AM0504020	GRAYBAR	1
	16 X 20 BACKPLATE		AMPZ05040	GRAYBAR	1
	KEYED LOCK		AMFL2844	GRAYBAR	1

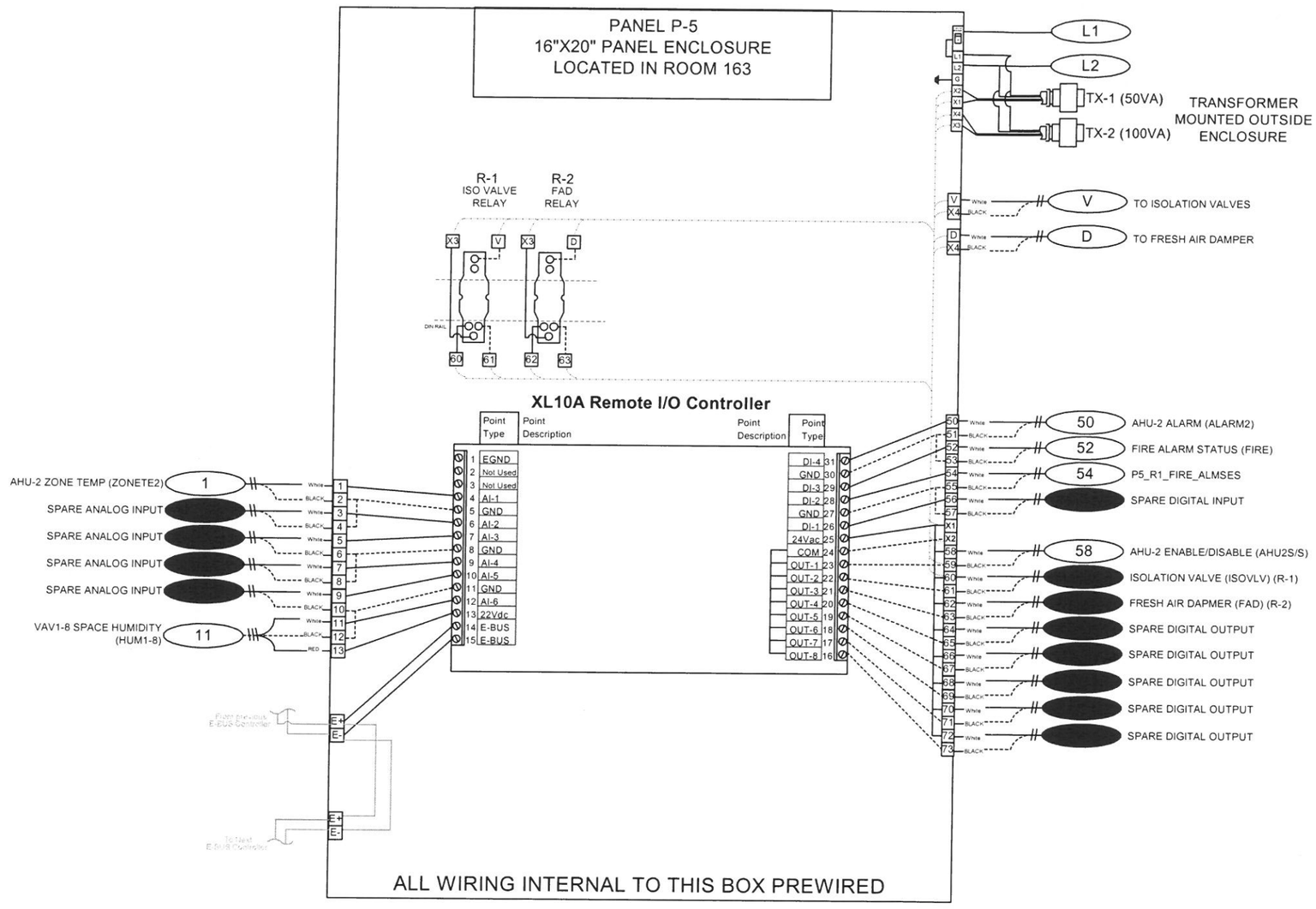

ALL DIMENSIONS TO BE FIELD VERIFIED BEFORE ORDERING AND/OR FABRICATION OF COMPONENTS

FINAL APPROVED FOR CONSTRUCTION

OWNER TITLE DATE

Control Solutions TITLE DATE

CONTROL SOLUTIONS / RICH HOUSH SERVICES INC.

PROPRIETARY PROPERTY

THIS DRAWING IS THE PROPRIETARY PROPERTY OF CONTROL SOLUTIONS / RICH HOUSH SERVICES INC. AND MUST NOT BE USED EXCEPT IN CONNECTION WITH OUR WORK, NOR IN ANY MANNER DISCLOSED TO ANY THIRD PARTY WITHOUT CSI'S / RHS'S PRIOR WRITTEN CONSENT. ALL RIGHTS OF DESIGN AND INVENTION ARE RESERVED.

NO	DATE	BY	REVISION DESCRIPTION
1	6/1/01	JT	As-Built
2			
3			
4			

FILE: Berwyn-asbuilt.vsd

DRAWING TYPE:

Control Solutions
631 E BUTTERFIELD ROAD
SUITE 314
LOMBARD IL
PHONE 630 852-1700
FAX 630 852-9330

DATE: 6/9/00

ENGINEERED BY: Krista Tapscott

DRAWN BY: Krista Tapscott

APPROVED BY:

DATE APPROVED:

CUSTOMER NAME: Berwyn Public Safety

LOCATION: Berwyn, IL

DRAWING DESCRIPTION: P-5: AHU-2, FIRE, ISO VLV PANEL

AS-BUILT COPY

RTU-1

SEQUENCE OF OPERATIONS

RTU-1:

The roof top unit is pre-packaged with controls. The unit shall operate according to McQuay's sequence of operations.

PACKAGED ROOF TOP UNIT
ALL DEVICES PROVIDED, INSTALLED, AND WIRED BY McQUAY

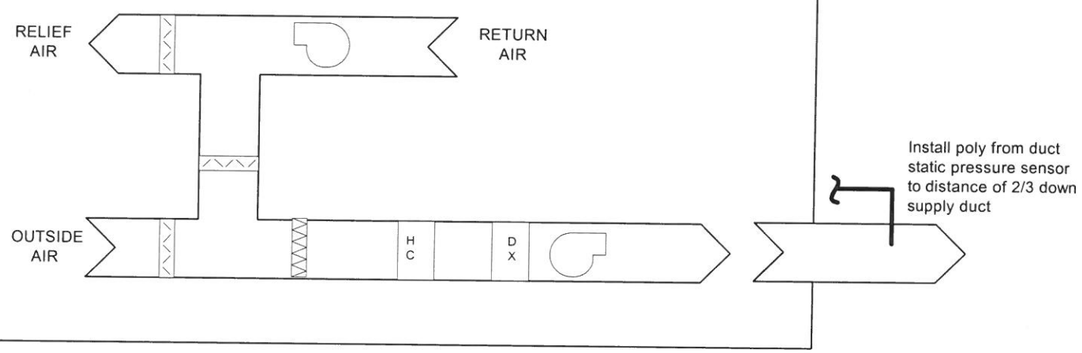

McQUAY CONTROL PANEL

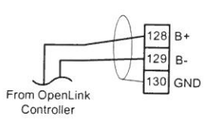

CONTROL SOLUTIONS / RICH HOUSH SERVICES INC.

PROPRIETARY PROPERTY

THIS DRAWING IS THE PROPRIETARY PROPERTY OF CONTROL SOLUTIONS / RICH HOUSH SERVICES INC. AND MUST NOT BE USED EXCEPT IN CONNECTION WITH OUR WORK, NOR IN ANY MANNER DISCLOSED TO ANY THIRD PARTY WITHOUT CSIS / RHS/S PRIOR WRITTEN CONSENT. ALL RIGHTS OF DESIGN AND INVENTION ARE RESERVED.

NO	DATE	BY	REVISION DESCRIPTION
1	6/1/01	JT	As-Built
2			
3			
4			

FILE: Berwyn-asbuilt.vsd

DRAWING TYPE:

ALL DIMENSIONS TO BE FIELD VERIFIED BEFORE ORDERING AND/OR FABRICATION OF COMPONENTS

Control Solutions
631 E BUTTERFIELD ROAD
SUITE 314
LOMBARD IL
PHONE 630 852-1700
FAX 630 652-9030

DATE: 6/9/00
ENGINEERED BY: Krista Tapscott
DRAWN BY: Krista Tapscott
APPROVED BY:
DATE APPROVED:

FINAL APPROVED FOR CONSTRUCTION

OWNER TITLE DATE

Control Solutions TITLE DATE

CUSTOMER NAME: Berwyn Public Safety
LOCATION: Berwyn, IL
DRAWING DESCRIPTION: RTU-1

AS-BUILT COPY

RTU-1 CONTROLLER

MOUNT IN RTU-1

TAG	DESCRIPTION	TYPE	PART NUMBER	MFGR.	QTY.
C-1	McQUAY OPENLINK/XD505A COM.		Q9200A1001	HONEYWELL	1
S-1	SUBMODULE		XD505A	HONEYWELL	1
TX-1	TRANSFORMER		MUC-024-050-TF-CB	CORE	1

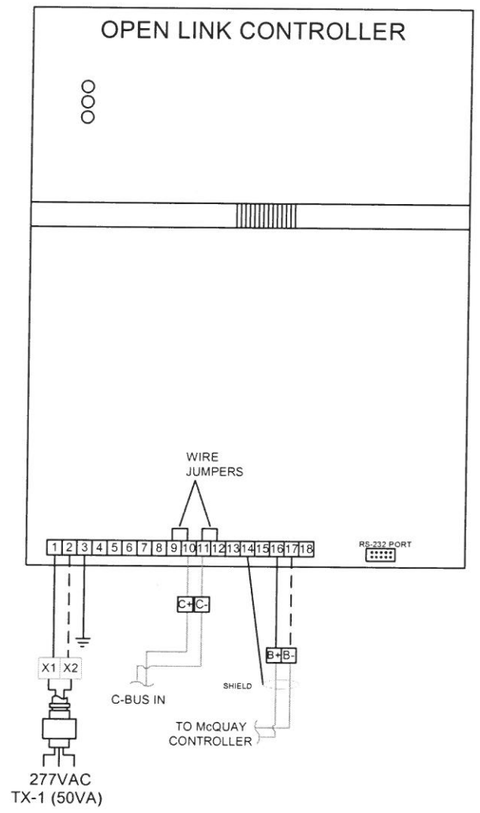

ALL DIMENSIONS TO BE FIELD VERIFIED BEFORE ORDERING AND/OR FABRICATION OF COMPONENTS

FINAL APPROVED FOR CONSTRUCTION

OWNER TITLE DATE

Control Solutions TITLE DATE

CONTROL SOLUTIONS / RICH HOUSH SERVICES INC.

PROPRIETARY PROPERTY

THIS DRAWING IS THE PROPRIETARY PROPERTY OF CONTROL SOLUTIONS / RICH HOUSH SERVICES INC. AND MUST NOT BE USED EXCEPT IN CONNECTION WITH OUR WORK, NOR IN ANY MANNER DISCLOSED TO ANY THIRD PARTY WITHOUT CSI'S / RHSI'S PRIOR WRITTEN CONSENT. ALL RIGHTS OF DESIGN AND INVENTION ARE RESERVED.

NO	DATE	BY	REVISION DESCRIPTION
1	6/1/01	JT	As-Built
2			
3			
4			

FILE: Berwyn-asbuilt.vsd

DRAWING TYPE:

Control Solutions

631 E BUTTERFIELD ROAD
SUITE 314
LOMBARD IL
PHONE 630 852-1700
FAX 630 852-0050

DATE 6/9/00

ENGINEERED BY Krista Tapscott

DRAWN BY Krista Tapscott

APPROVED BY

DATE APPROVED

CUSTOMER NAME Berwyn Public Safety

LOCATION Berwyn, IL

DRAWING DESCRIPTION RTU-1 CONTROLLER

AS-BUILT COPY

RTU-2

TAG	DESCRIPTION	TYPE	PART NUMBER	MFGR.	QTY.
T-1	PROGRAMMABLE THERMOSTAT		PROVIDED WITH UNIT		
B-1	THERMOSTAT SUBBASE		PROVIDED WITH UNIT		

SEQUENCE OF OPERATIONS

RTU-2:

The roof top unit is pre-packaged with controls. The unit shall operate according to Aaon's sequence of operations.

PACKAGED ROOF TOP UNIT
ALL DEVICES PROVIDED, INSTALLED, AND WIRED BY AAON

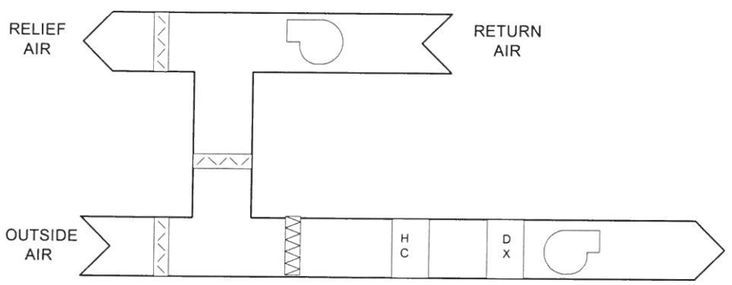

THERMOSTAT INTERLOCK WIRING

Located in Community Room 105

Aaon wiring terminal strip

**Remove factory installed jumpers between A2 and A1

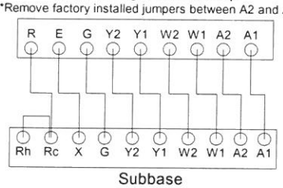

Subbase

CONTROL SOLUTIONS / RICH HOUSH SERVICES INC.

PROPRIETARY PROPERTY

THIS DRAWING IS THE PROPRIETARY PROPERTY OF CONTROL SOLUTIONS / RICH HOUSH SERVICES INC. AND MUST NOT BE USED EXCEPT IN CONNECTION WITH OUR WORK, NOR IN ANY MANNER DISCLOSED TO ANY THIRD PARTY WITHOUT CS/S / RHS/S PRIOR WRITTEN CONSENT. ALL RIGHTS OF DESIGN AND INVENTION ARE RESERVED.

NO.	DATE	BY	REVISION DESCRIPTION
1	6/1/01	JT	As-Built
2			
3			
4			

FILE: Berwyn-asbuilt.vsd

DRAWING TYPE:

ALL DIMENSIONS TO BE FIELD VERIFIED BEFORE ORDERING AND/OR FABRICATION OF COMPONENTS

Control Solutions
631 E BUTTERFIELD ROAD
SUITE 314
LOMBARD IL
PHONE 630 852-1700
FAX 630 852-6030

DATE: 6/9/00

ENGINEERED BY: Krista Tapscott

DRAWN BY: Krista Tapscott

APPROVED BY:

DATE APPROVED:

FINAL APPROVED FOR CONSTRUCTION

OWNER TITLE DATE

Control Solutions TITLE DATE

CUSTOMER NAME: Berwyn Public Safety

LOCATION: Berwyn, IL

DRAWING DESCRIPTION: RTU-2

AS-BUILT COPY

CUH-1, UH-1 to UH-5

TAG	DESCRIPTION	TYPE	PART NUMBER	MFGR.	QTY.
TT-1	LINE VOLTAGE STAT - CUH		PROVIDED BY UNIT MANUF.		
TT-2	LINE VOLTAGE STAT - UH		PROVIDED BY UNIT MANUF.		

SEQUENCE OF OPERATIONS

CUH-1, UH-1 to UH-5:

The unit heaters and cabinet unit heaters shall be locally controlled by a wall mounted thermostat. When the temperature drops below the setpoint (adj), the heaters shall start.

UNIT HEATER: UH-1 to UH-5

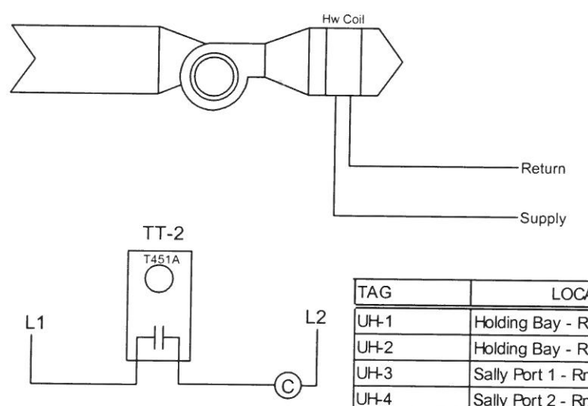

TAG	LOCATION
UH-1	Holding Bay - Rm 134
UH-2	Holding Bay - Rm 134
UH-3	Sally Port 1 - Rm 135
UH-4	Sally Port 2 - Rm 136
UH-5	Storage - Rm 137

CABINET UNIT HEATER: CUH-1
Located in Vestibule 100

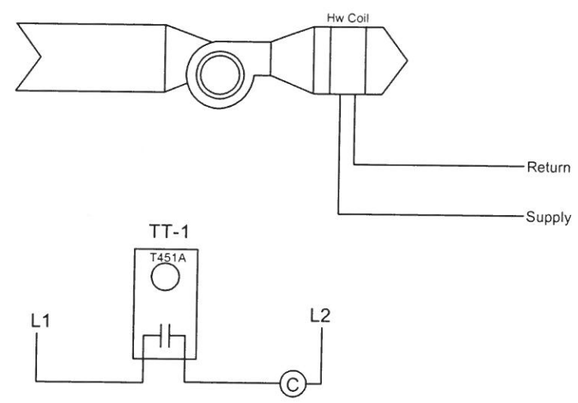

ALL DIMENSIONS TO BE FIELD VERIFIED BEFORE ORDERING AND/OR FABRICATION OF COMPONENTS

FINAL APPROVED FOR CONSTRUCTION

OWNER TITLE DATE

Control Solutions TITLE DATE

CONTROL SOLUTIONS / RICH HOUSH SERVICES INC.

PROPRIETARY PROPERTY

THIS DRAWING IS THE PROPRIETARY PROPERTY OF CONTROL SOLUTIONS / RICH HOUSH SERVICES INC. AND MUST NOT BE USED EXCEPT IN CONNECTION WITH OUR WORK, NOR IN ANY MANNER DISCLOSED TO ANY THIRD PARTY WITHOUT CSI'S / RHS'S PRIOR WRITTEN CONSENT. ALL RIGHTS OF DESIGN AND INVENTION ARE RESERVED.

NO.	DATE	BY	REVISION DESCRIPTION
1	6/1/01	JT	As-Built
2			
3			
4			

FILE: Berwyn-asbuilt.vsd

DRAWING TYPE:

Control Solutions
631 E BUTTERFIELD ROAD
SUITE 314
LOMBARD IL
PHONE 630 852-1700
FAX 630 852-6030

DATE	6/9/00
ENGINEERED BY	Krista Tapscott
DRAWN BY	Krista Tapscott
APPROVED BY	
DATE APPROVED	
CUSTOMER NAME	Berwyn Public Safety
LOCATION	Berwyn, IL
DRAWING DESCRIPTION	CUH-1, UH-1 to UH-5